Centre Number	Candidate Number	Name

CAMBRIDGE INTERNATIONAL EXAMINATIONS
General Certificate of Education Ordinary Level

WOODWORK 6030/01

Paper 1 Theory, Drawing and Design

October/November 2003

2 hours 45 minutes

Additional Materials: A2 Drawing paper (1 sheet)
Answer paper
Coloured crayons
Metric scale rule, scale 1 : 5
Standard drawing equipment

READ THESE INSTRUCTIONS FIRST

Write your Centre number, candidate number and name on all the work you hand in.
Write in dark blue or black pen in the spaces provided on the Question Paper.
You may use a soft pencil for any diagrams, graphs or rough working.
Do not use staples, paper clips, highlighters, glue or correction fluid.

Section I Part A
Answer **all** parts of Question **1**.
Write your answers in the spaces provided on the question paper.
Section I Part B
Answer any **two** questions.
Write your answers on the separate answer paper provided.
Section II
Answer **all** parts of this section.
Use the A2 sheet of drawing paper prepared prior to the examination for your answers.
At the end of the examination, fasten all your work securely together.
The number of marks is given in brackets [ ] at the end of each question or part question.
All dimensions are in millimetres.

If you have been given a label, look at the details. If any details are incorrect or missing, please fill in your correct details in the space given at the top of this page.

Stick your personal label here, if provided.

For Examiner's Use		
Section IA		
Section IB	2	
	3	
	4	
	5	
Section II		
TOTAL		

This document consists of **9** printed pages and **3** blank pages.

© CIE 2003
UNIVERSITY of CAMBRIDGE
Local Examinations Syndicate
[Turn over

www.theallpapers.com

For Examiner's Use

Section I Part A

Answer **all** questions from this part in the spaces provided on the question paper.

You are advised to spend no longer than 35 minutes on this part.

1 **(a)** Personal safety is important when using a pedestal drilling machine.

Name **two** safety rules which should be obeyed.

Rule 1 .....

Rule 2 ..... [2]

(b) Give the full name of each of the joints shown in Fig. 1.

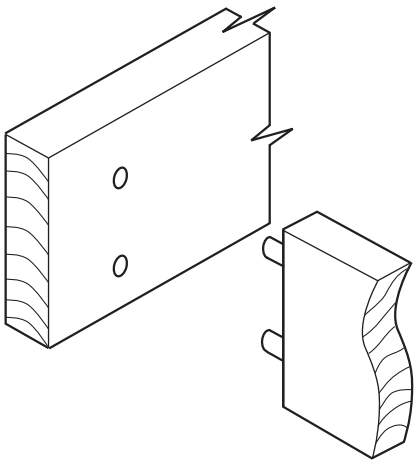

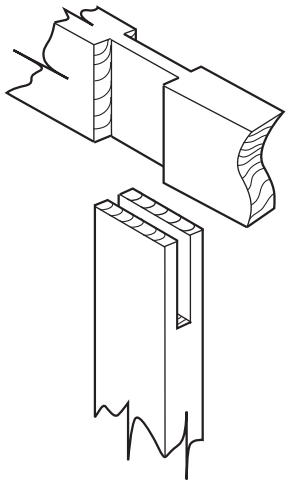

(i) ..... **(ii)** .....

....

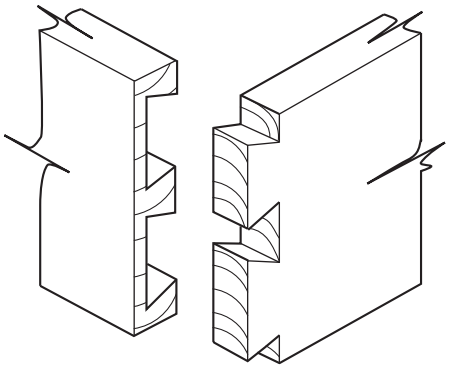

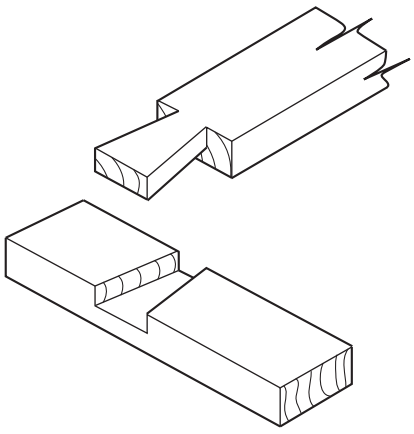

(iii) ..... **(iv)** .....

....

[8]

Fig. 1

www.theallpapers.com

(c) Name the two datum surfaces shown in Fig. 2.

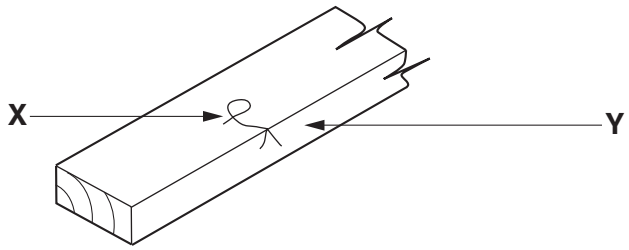

Fig. 2

(i) Datum surface **X** .....

Datum surface **Y** .....

(ii) Explain briefly what each datum surface is used for:

Use of Datum surface **X** .....

.....

Use of Datum surface **Y** .....

.....

[4]

(d) Name **one** softwood and **one** hardwood and briefly describe the characteristics of each.

Softwood .....

Characteristics .....

.....

Hardwood .....

Characteristics .....

..... [6]

[Turn over

www.theallpapers.com

(e) Name a suitable adhesive for use on indoor furniture and one which has waterproof qualities for use outdoors.

Indoor adhesive .....

Outdoor adhesive ..... [2]

(f) Fig. 3 shows three woodworking tools. The name of each tool is given. Name the specific use of each tool.

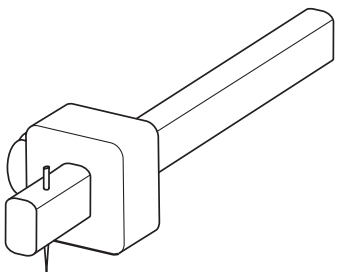

(i) Marking Gauge

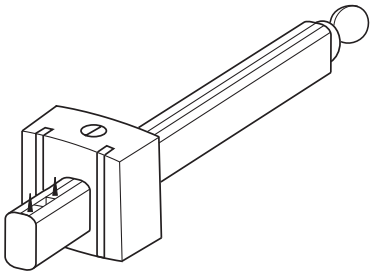

(ii) Mortice Gauge

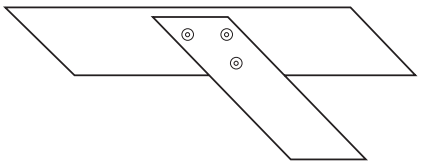

(iii) Mitre Square

Fig. 3

Use of Tool **(i)** .....

Use of Tool **(ii)** .....

Use of Tool **(iii)** ..... [3]

www.theallpapers.com

SECTION I PART B IS ON PAGE 6

www.theallpapers.com

Section I Part B

Answer any **two** questions from this part on the separate answer paper provided.

You are advised to spend no longer than 35 minutes on this part.

2 **(a)** Name the machine that is used for turning wood. [1]

(b) Wood is usually turned either between centres or by using a faceplate.

Sketch the main features of **one** of these methods and describe the way that the wood is prepared and mounted for turning. [9]

(c) Safety is vital when turning wood. Give **two** safety rules which must be observed for the method you have described in your answer to **(b)**. [2]

www.theallpapers.com

3 **(a)** Fig. 4 shows a fixing used to join together two pieces of wood.

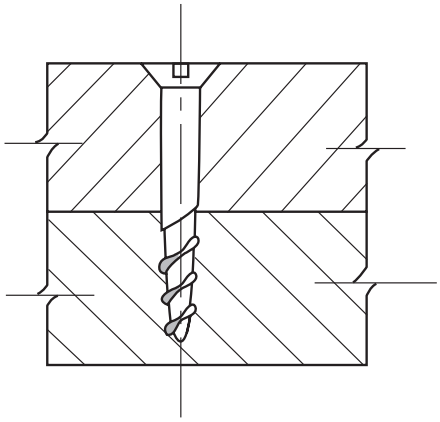

Fig. 4

Name the fixing and describe the processes involved in preparing the wood to receive the fixing. [6]

(b) Fig. 5 shows a fitting.

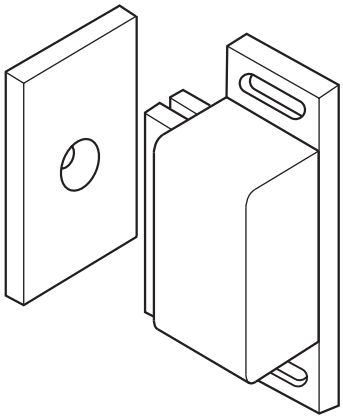

Fig. 5

(i) Name the fitting and give a specific situation where it would be used. [2]

(ii) Show the stages of attaching the fitting. [4]

4 **(a)** Sketch a cross section through the trunk of a tree and label **six** important features. [6]

(b) Describe briefly how each of your labelled features helps in the growth of the tree. [6]

5 When designing projects to be made in the workshop there are several important stages to work through to reach the final solution.

Name and briefly describe the main stages of designing. You should use a project you have made yourself to help in your description. [12]

www.theallpapers.com

Section II Drawing and Design

Answer **all** questions on the previously prepared drawing paper.

Use only one side of the drawing paper.

You will be required to draw part of this section to a scale of **1 : 5**.

You are advised to spend 1 hour 35 minutes on this section.

On your drawing paper use the space to the right of the vertical line to answer **Part C** of this section and the space to the left to answer **Part D**.

The drawing on page 9, Fig. 6, shows details of a telephone seat/unit. The unit has a foam padded seat and a carcase which is designed to house a drawer and a telephone on the top. The legs are made from solid timber, 45 square and all underframe members are also solid timber 50 x 20 thick. The carcase is made from manufactured board 20 thick. The sizes of the drawer parts are left to your discretion.

Part C.

Sketch freehand and approximately $\frac{1}{2}$ full size:

(i) an exploded view of the joint you would use to join one of the corners of the underframe at **A**; [8]

(ii) a design for a handle for the drawer front; (not shown) [5]

(iii) shaping to the top corners of the carcase at **B**. [3]

Part D.

(a) Draw in first or third angle projection, using a scale of 1 : 5 (hidden detail is not required):

(i) a Front View in the direction of arrow **Y**; [10]

(ii) a Sectional End View on the line **XX**, to include details of the drawer; [11]

(iii) a Plan. [2]

(b) Add six main dimensions to your drawings. [3]

(c) In the Title Box include the following details in suitable lettering:

(i) a Title;

(ii) your Name;

(iii) your Examination Number;

(iv) the Projection you have used. [3]

Marks for Quality. [3]

Marks for Layout. [2]

www.theallpapers.com

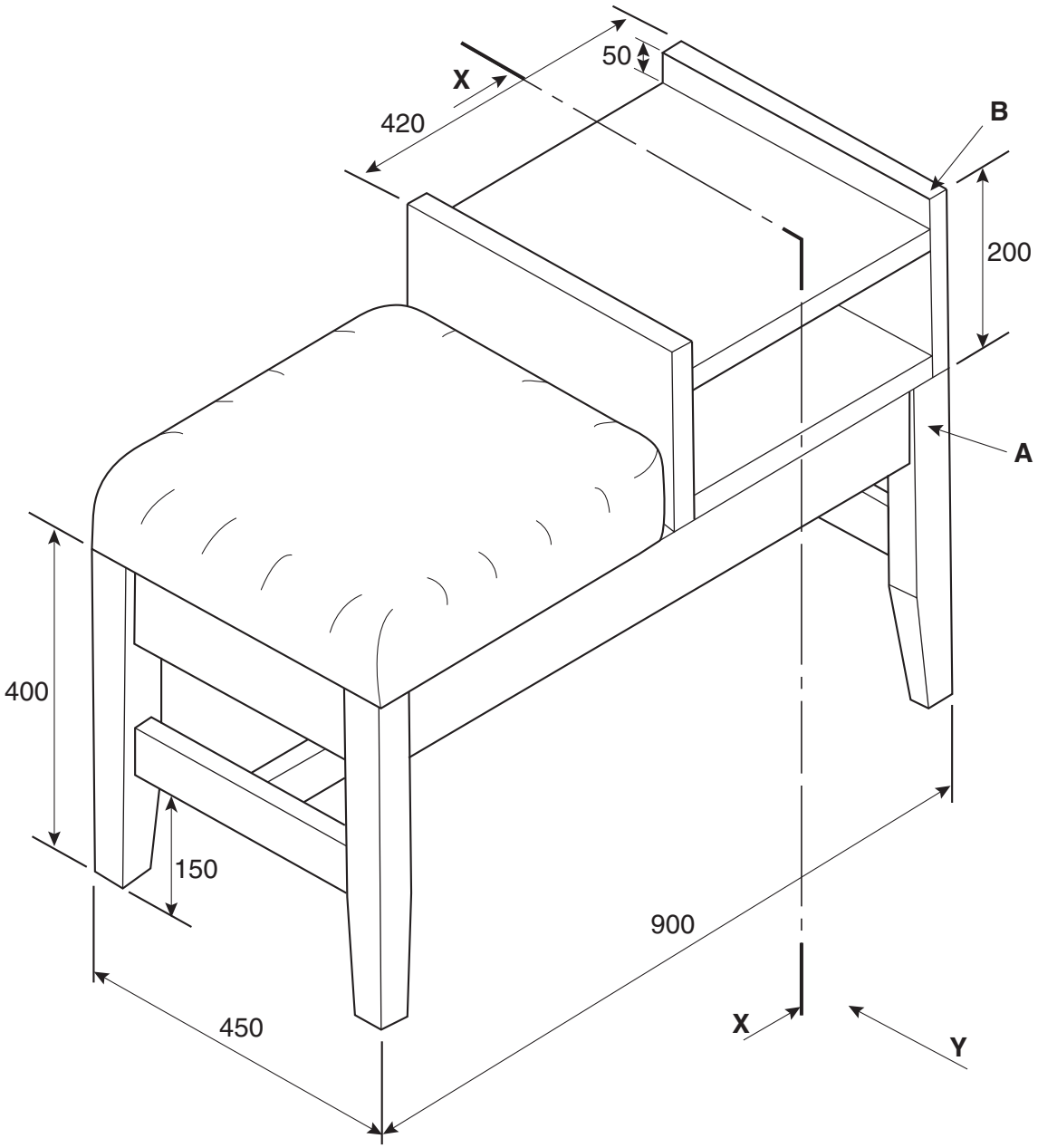

Fig. 6

www.theallpapers.com

BLANK PAGE

www.theallpapers.com

BLANK PAGE

www.theallpapers.com

BLANK PAGE

www.theallpapers.com