UNIVERSITY OF CAMBRIDGE INTERNATIONAL EXAMINATIONS
International General Certificate of Secondary Education

CANDIDATE NAME

CENTRE NUMBER

CANDIDATE NUMBER

7889880349

CO-ORDINATED SCIENCES **0654/33**

Paper 3 (Extended) **October/November 2010**

2 hours

Candidates answer on the Question Paper.

No Additional Materials are required.

READ THESE INSTRUCTIONS FIRST

Write your Centre number, candidate number and name on all the work you hand in.
Write in dark blue or black pen.
You may use a soft pencil for any diagrams, graphs, tables or rough working.
Do not use staples, paper clips, highlighters, glue or correction fluid.
DO **NOT** WRITE IN ANY BARCODES.

Answer **all** questions.
A copy of the Periodic Table is printed on page 28.

At the end of the examination, fasten all your work securely together.
The number of marks is given in brackets [ ] at the end of each question or part question.

For Examiner's Use	
1	
2	
3	
4	
5	
6	
7	
8	
9	
10	
Total	

This document consists of **24** printed pages and **4** blank pages.

© UCLES 2010

www.theallpapers.com

For Examiner's Use

1 **(a)** In electrochemical cells (batteries), electrical energy is obtained from chemical reactions.

Fig. 1.1 shows some uses of electrochemical cells.

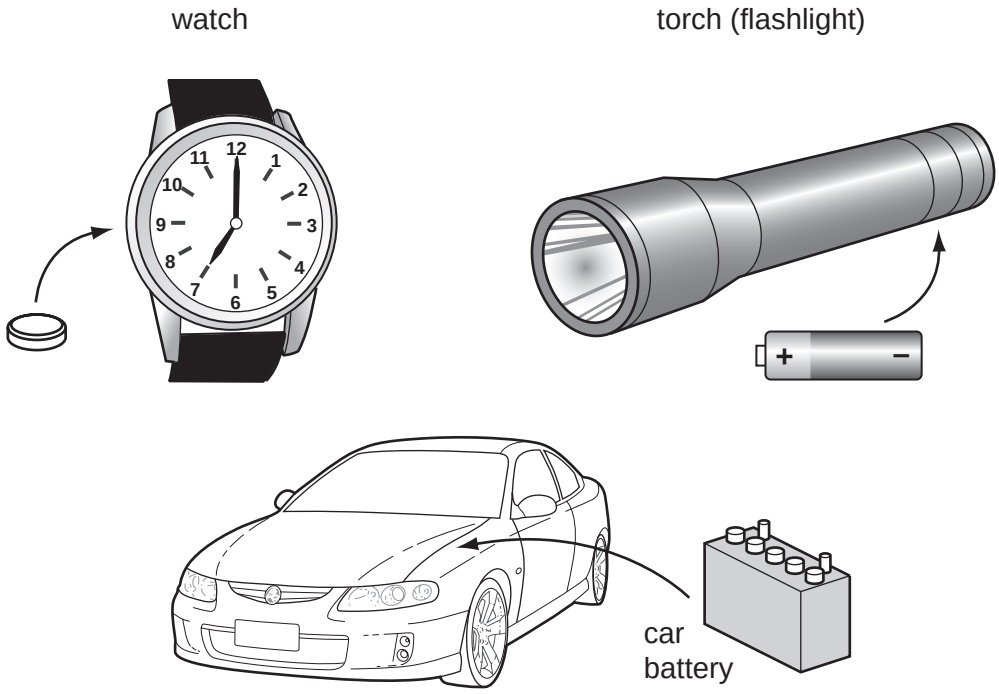

Fig. 1.1

(i) Small electrochemical cells, like those used in watches and torches (flashlights), stop working and have to be replaced fairly frequently.

Explain what has happened inside the cells to cause them to stop working.

.....

..... [1]

(ii) Explain why car batteries may never need to be replaced during the lifetime of the car.

.....

..... [1]

© UCLES 2010

www.theallpapers.com

For Examiner's Use

(b) Electrical energy may be obtained from an electrochemical cell made by placing metal electrodes into a potato.

Fig. 1.2 shows a diagram of such a cell.

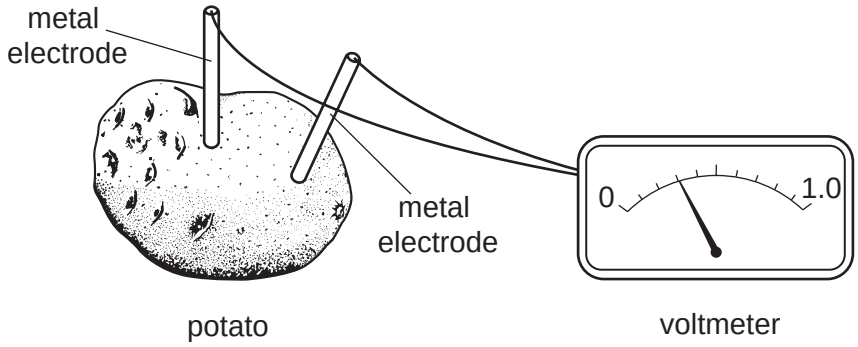

Fig. 1.2

A student investigated the use of different metals as electrodes. The metals he used are listed below in order of reactivity.

magnesium	(most reactive)
zinc	
lead	↓
copper	(least reactive)

(i) Suggest why a potato can be used as part of an electrochemical cell.

.....

..... [1]

(ii) State the pair of metals from the list that would produce the highest voltage when used as the electrodes.

Explain your answer.

.....

.....

..... [2]

© UCLES 2010

[Turn over

www.theallpapers.com

For Examiner's Use

(c) Some modern cars, known as hybrids, have two engines.

One of these engines uses hydrocarbon fuel (gasoline) which is combusted (burned) to provide the energy required to move the car.

The second engine is a powerful electric motor which uses energy provided by an electrochemical cell.

When the car moves away from rest and continues to move slowly, the electric motor drives the car and the combustion engine is switched off.

(i) Heptane, C_7H_{16}, is an alkane found in gasoline.

Complete the balanced symbolic equation below for the combustion of heptane.

$$C_7H_{16} + \text{.....} \rightarrow 7CO_2 + 8H_2O$$ [2]

(ii) Suggest why there could be an improvement to the environment, particularly in towns and cities, if hybrid cars replaced ordinary cars.

.....

.....

.....

.....

..... [3]

© UCLES 2010

www.theallpapers.com

For Examiner's Use

2 **(a)** Fig. 2.1 is a photograph of a plant tissue seen through a light microscope.

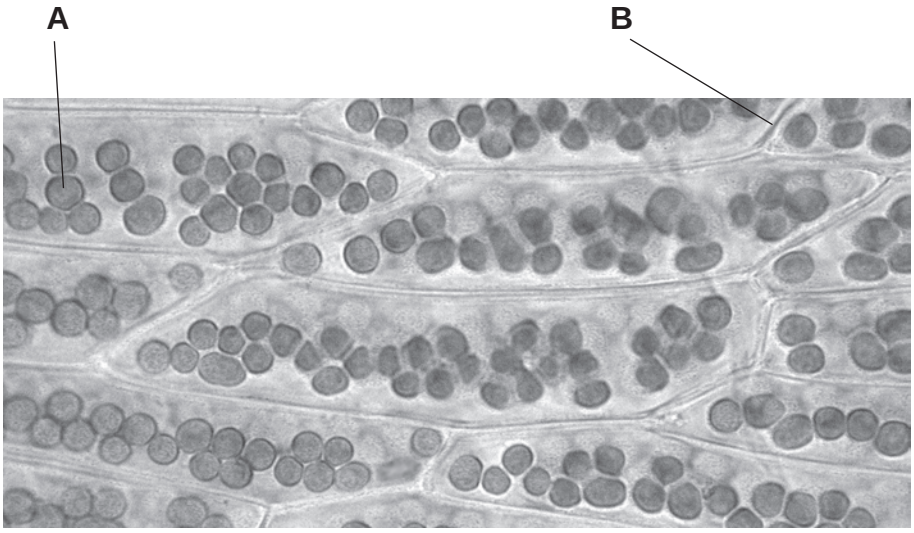

Fig. 2.1

(i) Name the structures labelled **A** and **B**.

A .....

B ..... [2]

(ii) Describe **two** ways in which the cells in Fig. 2.1 differ from animal cells.

1 .....

2 ..... [2]

www.theallpapers.com

For Examiner's Use

(b) Fig. 2.2 shows apparatus that was used to investigate transpiration. The two pieces of apparatus were set up and left in the same conditions for 24 hours. The levels of water at the start and end of the 24 hours are shown on the diagram.

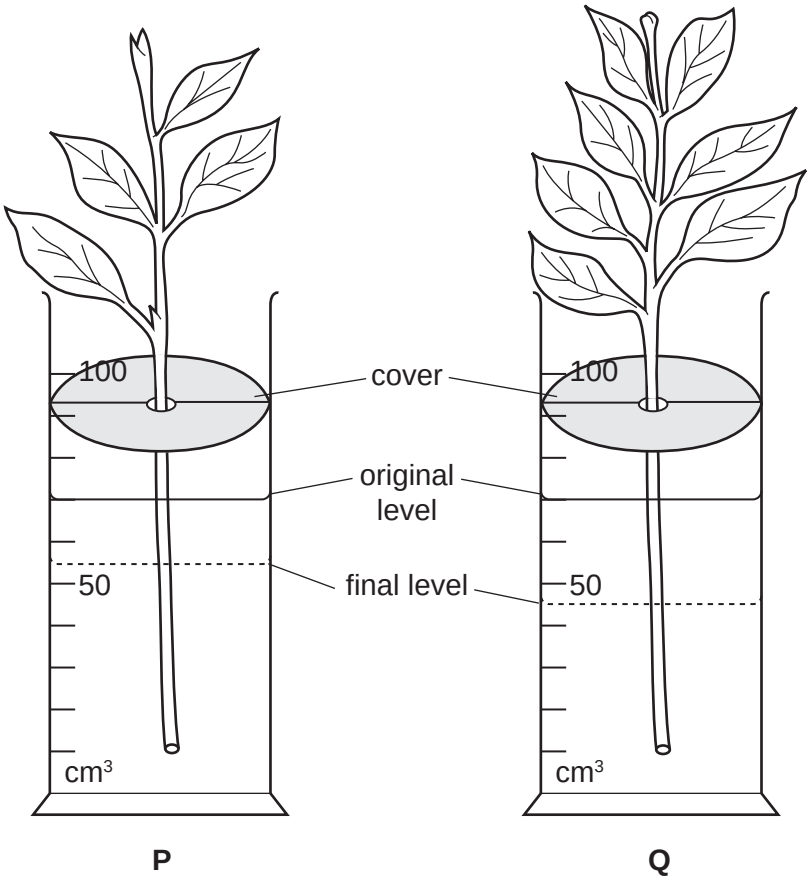

Fig. 2.2

(i) Suggest why the level of water went down more in **Q** than in **P**.

.....

.....

.....

..... [3]

(ii) Predict the results that would be obtained if apparatus **Q** was left in the same position for the next 24 hours, but at a higher temperature.

Explain your prediction.

.....

.....

.....

..... [3]

www.theallpapers.com

For Examiner's Use

3 **(a)** The isotope protactinium-234 undergoes radioactive decay by emitting beta radiation. Protactinium-234 has a half-life of 105 seconds.

(i) Explain the meaning of the terms *radioactive decay* and *half-life*.

radioactive decay .....

.....

half-life .....

..... [2]

(ii) 0.400 mg of protactinium-234 decays until 0.025 mg remain.

Calculate how long this takes.

Show your working.

..... [2]

(b) Apart from nuclear weapons and nuclear power, describe **one** practical use of radioactive isotopes.

.....

.....

.....

..... [2]

www.theallpapers.com

For Examiner's Use

4 **(a)** Fig. 4.1 shows the percentage of people living in Australia who have blood groups O, A, B and AB.

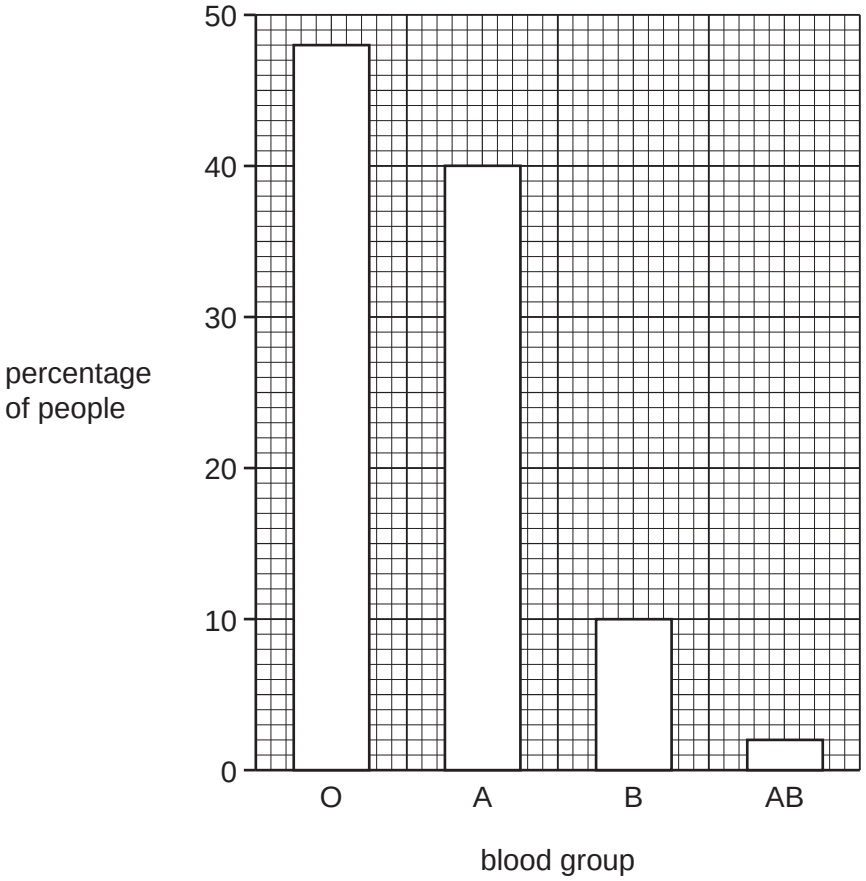

Fig. 4.1

(i) Blood groups in humans show discontinuous variation.

Explain what is meant by *discontinuous variation*.

.....

.....

..... [2]

(ii) Use the information in Fig. 4.1 to suggest whether a person's blood group is caused by their genes, their environment, or both genes and environment.

Explain your answer.

.....

.....

..... [2]

© UCLES 2010

www.theallpapers.com

For Examiner's Use

(b) (i) Give **one** example of continuous variation in humans.

.....

[1]

(ii) On the axes below, sketch a graph to show continuous variation in the feature you have given in **(b)(i)**.

Label the axes on your graph.

[3]

(c) All species show variation in some of their characteristics.

Explain why this variation is important in evolution. You may like to use an example to help your explanation.

.....

.....

.....

.....

.....

.....

[4]

www.theallpapers.com

BLANK PAGE

© UCLES 2010

www.theallpapers.com

5 **(a)** Fig. 5.1 shows a simple circuit containing two identical lamps.

For Examiner's Use

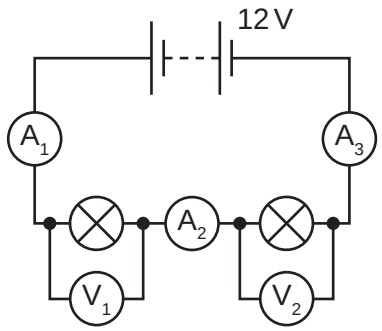

Fig. 5.1

Ammeter $\mathbf{A_1}$ reads 0.30 A.

Write down the readings on

ammeter $\mathbf{A_2}$ .....

ammeter $\mathbf{A_3}$ .....

voltmeter $\mathbf{V_1}$ .....

voltmeter $\mathbf{V_2}$ ..... [2]

www.theallpapers.com

For Examiner's Use

(b) A student investigated the relationship between the potential difference across a lamp and the current in the lamp.

Fig. 5.2 shows a graph of the results of this investigation.

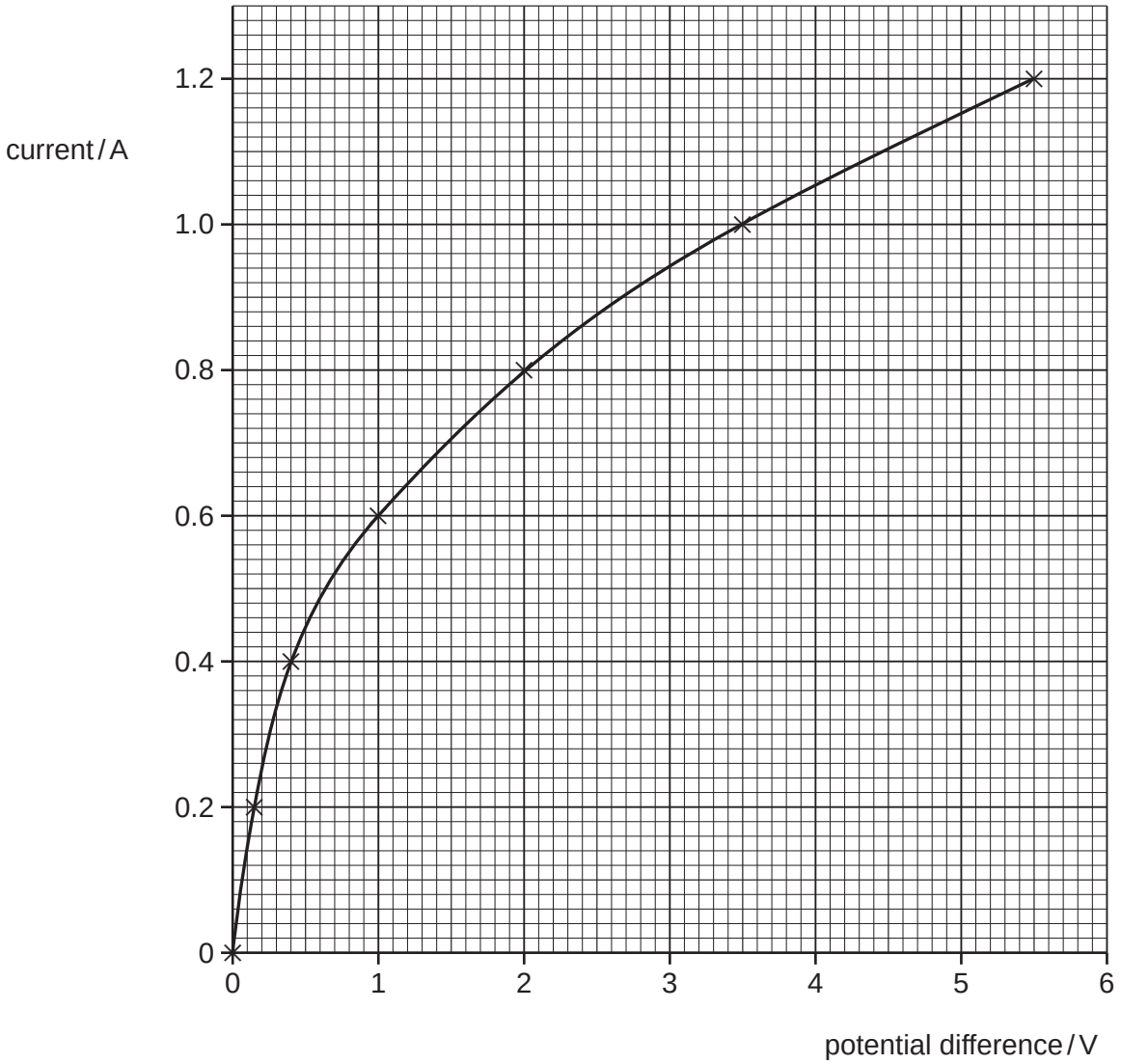

Fig. 5.2

(i) Calculate the resistance of the lamp when the current was 0.6 A.

State the formula that you use and show your working.

formula used

working

..... [2]

www.theallpapers.com

For Examiner's Use

(ii) Explain why the lamp does not obey Ohm's law.

.....

.....

..... [2]

(iii) On Fig. 5.2, sketch a line which could have been obtained if the lamp did obey Ohm's law. [1]

(c) Fig. 5.3 shows a soft iron ring. Two coils **X** and **Y**, each of 400 turns, are wound around the ring. Coil **X** is connected to a power supply and coil **Y** is connected to a 6 V lamp.

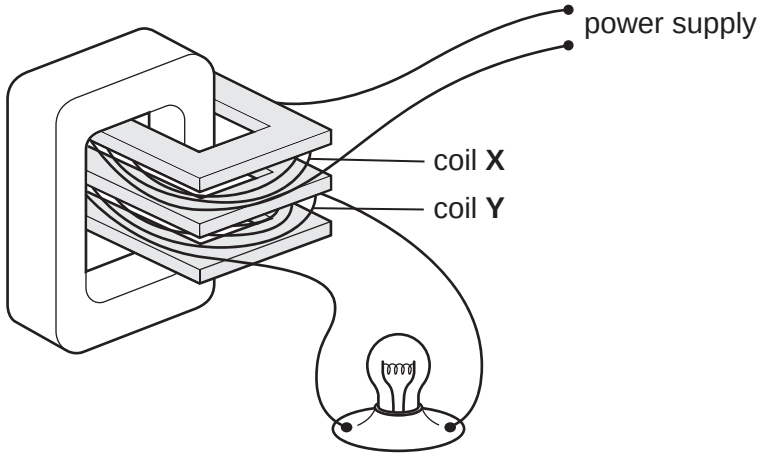

Fig. 5.3

Describe and explain what happens to the lamp when

the power supply is 6 V d.c.,

.....

.....

the power supply is 6 V a.c.

.....

..... [3]

www.theallpapers.com

For Examiner's Use

6 Table 6.1 shows some properties of five elements, **P** to **T**. The code letters are **not** the chemical symbols of the elements.

Table 6.1

element code letter	melting point / °C	boiling point / °C	conduction of electricity	number of outer electrons in an atom
P	−89	−186	insulator	8
Q	−39	357	conductor	2
R	−7	58	insulator	7
S	181	1342	conductor	1
T	114	184	insulator	7

Answer the following questions, using **only** the code letters of the elements shown in Table 6.1.

(a) (i) State and explain which element is very unreactive.

element .....

explanation .....

..... [1]

(ii) State and explain which element is a metal and a liquid at a room temperature of 20 °C.

element .....

explanation .....

.....

..... [2]

(iii) Elements **R** and **T** are halogens.

Use information from Table 6.1 to state and explain which of these elements has the greater proton number.

element .....

explanation .....

.....

..... [2]

© UCLES 2010

www.theallpapers.com

For Examiner's Use

(b) Fig. 6.1 shows atoms of the two elements, **R** and **S**. Only the outer electron shells are shown.

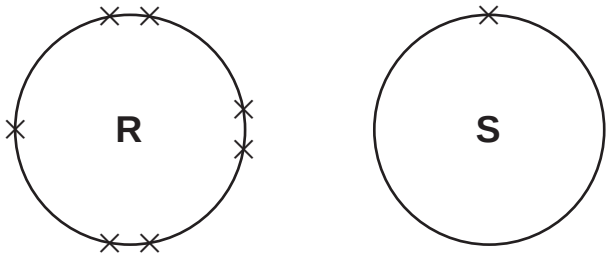

Fig. 6.1

Elements **R** and **S** react vigorously together to form an ionic compound.

The compound that forms has a very high melting point.

(i) Describe, in terms of electrons, how ionic bonds are formed between atoms of **R** and **S**.

.....

.....

.....

..... [2]

(ii) Explain, in terms of structure and the forces between ions, why the compound containing **R** and **S** is a solid with a high melting point.

.....

.....

.....

..... [3]

© UCLES 2010

[Turn over

www.theallpapers.com

(c) Suggest the process which is used to extract the element potassium from its compounds.

For Examiner's Use

Give a reason for your choice of process.

.....

.....

..... [2]

www.theallpapers.com

For Examiner's Use

7 Fig. 7.1 shows the driving force acting on a car of mass 1200 kg travelling at a constant speed of 18 m / s.

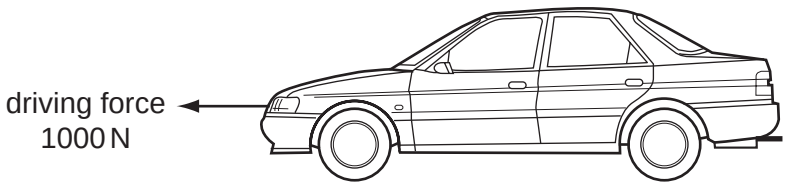

Fig. 7.1

(a) Calculate the amount of work done by the driving force in one minute.

Show your working.

..... [2]

(b) The car when travelling at 18 m / s is stopped using a braking force of 10 000 N.

(i) Calculate the deceleration of the car.

State the formula that you use and show your working.

formula used

working

..... [2]

(ii) Calculate the time needed for the car to stop.

State the formula that you use and show your working.

formula used

working

..... [2]

© UCLES 2010

www.theallpapers.com

(c) Fig. 7.2 shows a car on a hydraulic lift in a garage. The total weight being lifted is 18 000 N. The lift uses four large pistons. Each large piston has an area of 0.03 m^2. The smaller piston **X** has an area of 0.01 m^2.

For Examiner's Use

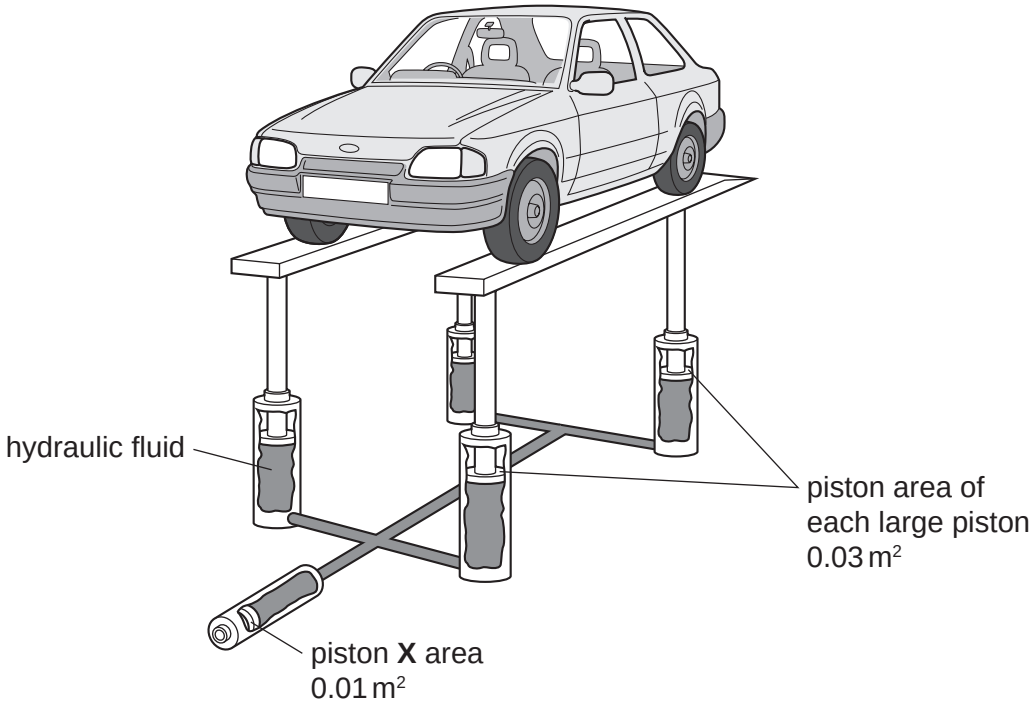

Fig. 7.2

(i) Calculate the total area of the four large pistons.

..... [1]

(ii) Use the formula

pressure = force / area

to calculate the pressure in the hydraulic fluid used in the lift.

Show your working.

..... [1]

www.theallpapers.com

(iii) This pressure is caused by piston **X**.

Calculate the minimum force which piston **X** must exert to lift the car.

Show your working.

For Examiner's Use

..... [1]

www.theallpapers.com

For Examiner's Use

8 Fig. 8.1 shows a section through the human thorax.

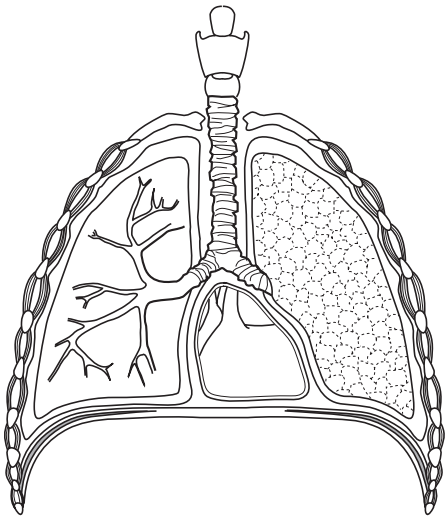

Fig.8.1

(a) On the diagram, use a label line and the appropriate letter to indicate:

A a muscle that contracts to bring about inspiration (breathing in)

B an area where gas exchange takes place

C a structure that rises during expiration (breathing out) [3]

(b) Describe the pathway taken by blood as it passes from the heart to the lungs and back to the heart again.

.....

.....

.....

..... [3]

(c) Describe how the blood transports oxygen.

.....

.....

..... [2]

© UCLES 2010

www.theallpapers.com

(d) Describe how oxygen is supplied to a developing fetus in its mother's uterus.

For Examiner's Use

.....

.....

.....

..... [3]

www.theallpapers.com

For Examiner's Use

9 Nitrogen compounds in soil are taken up by growing crops.

Fig. 9.1 shows two ways in which nitrogen compounds may be added to soil used for growing crops.

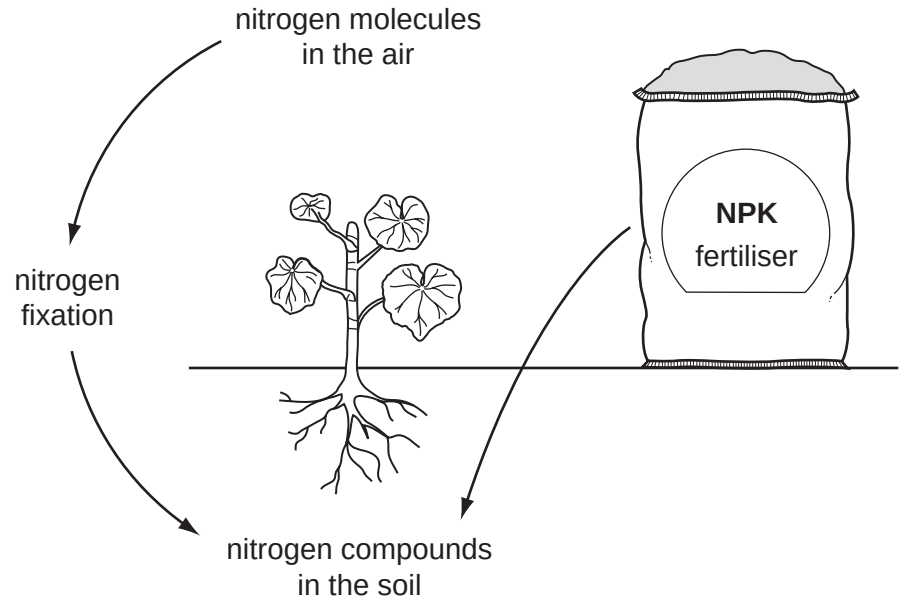

Fig. 9.1

(a) (i) State the meaning of the term *nitrogen fixation* and describe briefly **one** way in which this can occur.

.....

.....

.....

..... [3]

(ii) Explain why nitrogen molecules taken directly from the air **cannot** be used by most growing crops.

.....

..... [1]

© UCLES 2010

www.theallpapers.com

For Examiner's Use

(b) The nitrogen in NPK fertiliser exists in the form of compounds such as the salts ammonium nitrate, NH_4NO_3, and diammonium phosphate, $(NH_4)_2HPO_4$.

Diammonium phosphate may be obtained by reacting ammonia with phosphoric acid.

The balanced symbolic equation for this reaction is

$$2NH_3 + H_3PO_4 \rightarrow (NH_4)_2HPO_4$$

(i) State the number of moles of diammonium phosphate which are produced when 0.1 mol of ammonia react.

..... [1]

(ii) The relative formula mass of diammonium phosphate is 132.

Calculate the mass of diammonium phosphate which is produced when 0.1 mol of ammonia reacts.

Show your working.

..... [2]

(c) Plants produce glucose which provides energy during respiration.

Excess glucose is stored in the plant in the form of starch.

(i) Outline, in terms of molecules, what happens when glucose is changed into starch.

.....

.....

..... [2]

(ii) Glucose is soluble in water but starch is insoluble.

Describe and explain the difference in appearance between a solution of glucose and the sol (colloid) which forms when starch is dispersed in water.

.....

.....

.....

..... [3]

www.theallpapers.com

For Examiner's Use

10 (a) An athlete of mass 70 kg is running at a speed of 10 m / s in a sprint race.

Calculate the athlete's kinetic energy.

State the formula that you use and show your working.

formula used

working

..... [3]

(b) At the end of the race, evaporation helps to cool the athlete.

(i) Use the idea of particles to explain how evaporation helps the athlete to cool down.

.....

.....

..... [2]

(ii) At the end of a long race, an athlete may be wrapped in a shiny foil blanket to prevent him cooling down too quickly.

Explain how the shiny foil blanket helps to reduce energy losses. Use ideas about conduction, convection and radiation in your answer.

.....

.....

.....

..... [3]

© UCLES 2010

www.theallpapers.com

BLANK PAGE

© UCLES 2010

www.theallpapers.com

BLANK PAGE

www.theallpapers.com

BLANK PAGE

Copyright Acknowledgements:

Question 2 Photograph Dr E Jones © UCLES

Permission to reproduce items where third-party owned material protected by copyright is included has been sought and cleared where possible. Every reasonable effort has been made by the publisher (UCLES) to trace copyright holders, but if any items requiring clearance have unwittingly been included, the publisher will be pleased to make amends at the earliest possible opportunity.

University of Cambridge International Examinations is part of the Cambridge Assessment Group. Cambridge Assessment is the brand name of University of Cambridge Local Examinations Syndicate (UCLES), which is itself a department of the University of Cambridge.

www.theallpapers.com

© UCLES 2010

www.theallpapers.com

DATA SHEET
The Periodic Table of the Elements

Group																	
I	II										III	IV	V	VI	VII	0
							1 H Hydrogen 1									4 He Helium 2
7 Li Lithium 3	9 Be Beryllium 4										11 B Boron 5	12 C Carbon 6	14 N Nitrogen 7	16 O Oxygen 8	19 F Fluorine 9	20 Ne Neon 10
23 Na Sodium 11	24 Mg Magnesium 12										27 Al Aluminium 13	28 Si Silicon 14	31 P Phosphorus 15	32 S Sulfur 16	35.5 Cl Chlorine 17	40 Ar Argon 18
39 K Potassium 19	40 Ca Calcium 20	45 Sc Scandium 21	48 Ti Titanium 22	51 V Vanadium 23	52 Cr Chromium 24	55 Mn Manganese 25	56 Fe Iron 26	59 Co Cobalt 27	59 Ni Nickel 28	64 Cu Copper 29	65 Zn Zinc 30	70 Ga Gallium 31	73 Ge Germanium 32	75 As Arsenic 33	79 Se Selenium 34	80 Br Bromine 35	84 Kr Krypton 36
85 Rb Rubidium 37	88 Sr Strontium 38	89 Y Yttrium 39	91 Zr Zirconium 40	93 Nb Niobium 41	96 Mo Molybdenum 42	Tc Technetium 43	101 Ru Ruthenium 44	103 Rh Rhodium 45	106 Pd Palladium 46	108 Ag Silver 47	112 Cd Cadmium 48	115 In Indium 49	119 Sn Tin 50	122 Sb Antimony 51	128 Te Tellurium 52	127 I Iodine 53	131 Xe Xenon 54
133 Cs Caesium 55	137 Ba Barium 56	139 La Lanthanum 57 *	178 Hf Hafnium 72	181 Ta Tantalum 73	184 W Tungsten 74	186 Re Rhenium 75	190 Os Osmium 76	192 Ir Iridium 77	195 Pt Platinum 78	197 Au Gold 79	201 Hg Mercury 80	204 Tl Thallium 81	207 Pb Lead 82	209 Bi Bismuth 83	Po Polonium 84	At Astatine 85	Rn Radon 86
Fr Francium 87	226 Ra Radium 88	227 Ac Actinium 89 †															

140 Ce Cerium 58	141 Pr Praseodymium 59	144 Nd Neodymium 60	Pm Promethium 61	150 Sm Samarium 62	152 Eu Europium 63	157 Gd Gadolinium 64	159 Tb Terbium 65	162 Dy Dysprosium 66	165 Ho Holmium 67	167 Er Erbium 68	169 Tm Thulium 69	173 Yb Ytterbium 70	175 Lu Lutetium 71
232 Th Thorium 90	Pa Protactinium 91	238 U Uranium 92	Np Neptunium 93	Pu Plutonium 94	Am Americium 95	Cm Curium 96	Bk Berkelium 97	Cf Californium 98	Es Einsteinium 99	Fm Fermium 100	Md Mendelevium 101	No Nobelium 102	Lr Lawrencium 103

*58-71 Lanthanoid series
†90-103 Actinoid series

Key: a = relative atomic mass; X = atomic symbol; b = proton (atomic) number

The volume of one mole of any gas is 24 dm^3 at room temperature and pressure (r.t.p.).