UNIVERSITY OF CAMBRIDGE INTERNATIONAL EXAMINATIONS
International General Certificate of Secondary Education

CANDIDATE NAME

CENTRE NUMBER

CANDIDATE NUMBER

* 3 4 8 4 4 4 4 8 5 6 *

CO-ORDINATED SCIENCES **0654/31**

Paper 3 (Extended) **May/June 2013**

2 hours

Candidates answer on the Question Paper.

No Additional Materials are required.

READ THESE INSTRUCTIONS FIRST

Write your Centre number, candidate number and name on all the work you hand in.
Write in dark blue or black pen.
You may use a pencil for any diagrams or graphs.
Do not use staples, paper clips, glue or correction fluid.
DO **NOT** WRITE IN ANY BARCODES.

Answer **all** questions.
Electronic calculators may be used.
You may lose marks if you do not show your working or if you do not use appropriate units.
A copy of the Periodic Table is printed on page 36.

At the end of the examination, fasten all your work securely together.
The number of marks is given in brackets [ ] at the end of each question or part question.

This document consists of **34** printed pages and **2** blank pages.

© UCLES 2013

UNIVERSITY of CAMBRIDGE International Examinations

www.theallpapers.com

For Examiner's Use

1 **(a)** Table 1.1 shows the numbers of protons, neutrons and electrons in four atoms, **A**, **B**, **C** and **D**.

Table 1.1

atom	protons	neutrons	electrons
A	2	2	2
B	1	1	1
C	1	0	1
D	2	1	2

(i) Explain which one of the atoms, **A**, **B**, **C** or **D**, has the highest nucleon number (mass number).

atom .....

explanation .....

..... [1]

(ii) Explain which pair of atoms chosen from **A**, **B**, **C** and **D** are isotopes of helium.

atom ..... and atom .....

explanation .....

..... [2]

© UCLES 2013

www.theallpapers.com

For Examiner's Use

(b) Fig. 1.1 shows containers of hydrogen and helium.

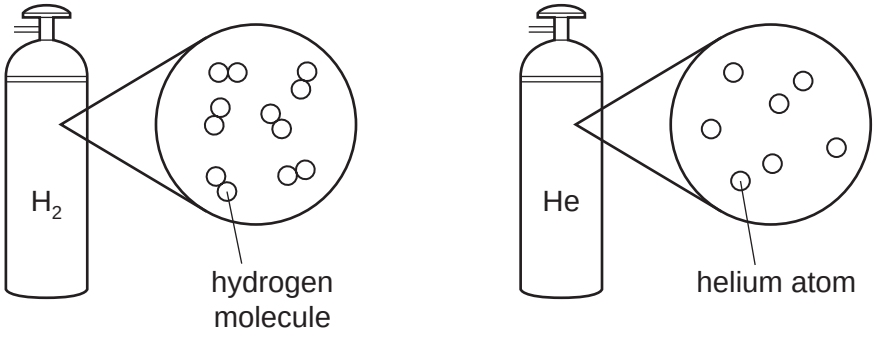

Fig. 1.1

(i) Describe, in terms of electrons, how a chemical bond forms between two hydrogen atoms.

You may draw a diagram of a hydrogen molecule if it helps you to answer this question.

.....

.....

..... [2]

(ii) Explain why helium exists as single atoms and **not** as molecules.

.....

..... [1]

www.theallpapers.com

(c) Hydrogen is often included in the reactivity series of metals.

For Examiner's Use

Use the idea of reactivity to explain the observations shown in Fig. 1.2.

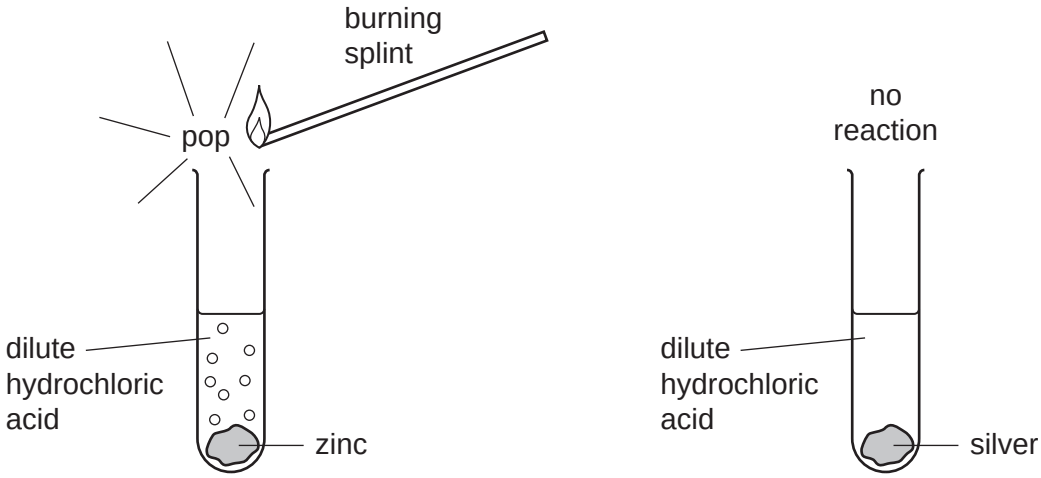

Fig. 1.2

.....

.....

.....

.....

.....

..... [3]

www.theallpapers.com

Please turn over for Question 2.

www.theallpapers.com

For Examiner's Use

2 **(a)** A fishing boat is floating on the sea.

The fishing boat uses echo sounding to detect a shoal of fish.

This is shown in Fig. 2.1.

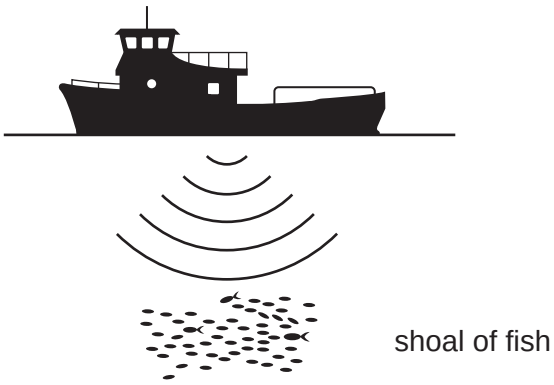

Fig. 2.1

Short pulses of sound are sent out from the boat. The echo from the shoal of fish is detected by a receiver on the boat 0.2 seconds later.

Sound waves travel through water at a speed of 1600 m / s.

(i) Calculate the distance of the shoal of fish below the boat.

State the formula that you use and show your working.

formula

working

..... [2]

(ii) The sound waves have a wavelength of 0.25 m.

Calculate the frequency of the waves.

State the formula that you use and show your working.

formula

working

..... [2]

www.theallpapers.com

For Examiner's Use

(b) Water waves are a renewable energy resource.

Outline **two** advantages of using renewable energy resources.

1 .....

.....

2 .....

..... [2]

(c) Fig. 2.2 shows an iceberg floating in the sea.

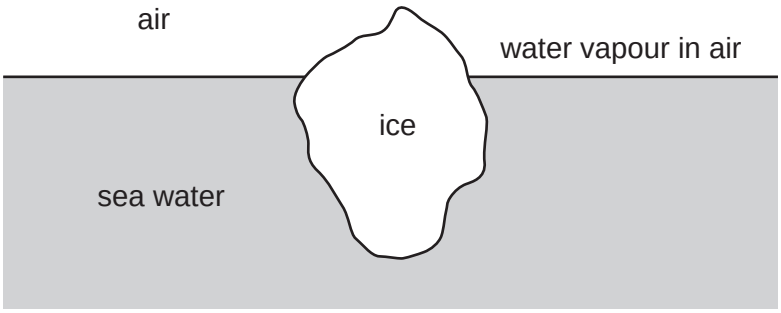

Fig. 2.2

(i) Which material named on Fig. 2.2 best fits the statement below?

"The particles are able to move, are randomly arranged and are closely packed."

..... [1]

(ii) Name the process by which water molecules in the sea become water molecules in the air.

..... [1]

© UCLES 2013

www.theallpapers.com

For Examiner's Use

3 Fig. 3.1 shows an insect-pollinated flower cut in half.

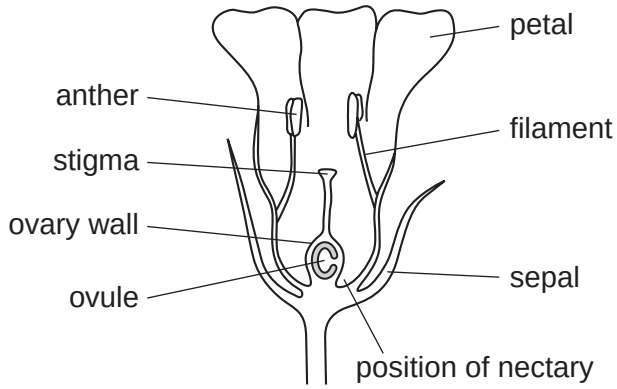

Fig. 3.1

(a) (i) List the structures, labelled in Fig. 3.1, that are the male parts of the flower.

.....[1]

(ii) List the structures, labelled in Fig. 3.1, that are the female parts of the flower.

.....[1]

(iii) The nectary produces a sugar solution.

Explain how the positions of the anthers, stigma and nectary help insect pollination to take place.

.....

.....

.....

.....

.....[3]

www.theallpapers.com

(b) After pollination, the ovule inside the ovary may be fertilised. The ovary develops into a fruit, and the ovule develops into a seed.

For Examiner's Use

(i) Draw a labelled diagram to show how **one named** fruit is dispersed by wind.

[2]

(ii) State why dispersal of seeds is important to a species of plant.

.....

..... [1]

www.theallpapers.com

For Examiner's Use

4 Petroleum (crude oil) and rock salt occur naturally in the Earth's crust.

(a) Petroleum is a mixture that contains thousands of different compounds. Many of these compounds are alkanes.

Draw the structure of the alkane molecule that contains eight hydrogen atoms. Use short lines to represent covalent bonds.

[2]

(b) When petroleum is refined, it is separated into simpler mixtures.

Fig. 4.1 shows a simplified diagram of a distillation column that is used to refine petroleum.

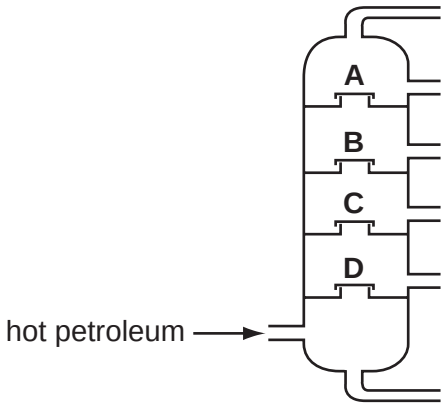

Fig. 4.1

(i) Describe how the temperature inside the apparatus changes from position **D** to position **A**.

..... [1]

www.theallpapers.com

For Examiner's Use

(ii) Explain, in terms of intermolecular forces and the size of molecules, why the average boiling point of the fraction at **B** differs from the average boiling point of the fraction at **C**.

.....

.....

.....

.....

.....

..... [3]

(c) Rock salt contains mainly sodium chloride which is a compound of the alkali metal, sodium, and the halogen, chlorine.

(i) Explain why the uncombined elements sodium and chlorine are **not** found in the Earth's crust.

.....

..... [1]

(ii) Describe the changes in electron configuration when sodium atoms (2,8,1) react with chlorine atoms (2,8,7) to form sodium chloride.

.....

.....

.....

..... [2]

www.theallpapers.com

(iii) Explain, in terms of its structure, why sodium chloride forms crystals which have a regular shape.

You should draw a simple diagram of the structure to help you to answer this question.

For Examiner's Use

.....

.....

[3]

www.theallpapers.com

Please turn over for Question 5.

www.theallpapers.com

For Examiner's Use

5 Milk is a liquid produced by cows, goats and other mammals, on which they feed their young.

(a) Table 5.1 shows the mass of some of the substances in 100 g samples of milk from three mammals.

Table 5.1

substance	cow's milk	goat's milk	water-buffalo's milk
protein / g	3.2	3.1	4.5
fat / g	3.9	3.5	8.0
carbohydrate / g	4.8	4.4	4.9
calcium / mg	120	100	195

(i) Which substance shown in Table 5.1 is present in the samples of milk in the smallest quantity?

..... [1]

(ii) Suggest which substance, **not** shown in Table 5.1, is present in the samples of milk in the largest quantity.

..... [1]

(iii) Explain **one** way in which drinking water-buffalo's milk might be better for a person's health than drinking goat's milk.

.....

.....

..... [2]

(iv) Explain **one** way in which drinking cow's milk might be better for a person's health than drinking water-buffalo's milk.

.....

.....

..... [2]

© UCLES 2013

www.theallpapers.com

For Examiner's Use

(v) Explain why calcium does not need to be digested in the human alimentary canal.

.....

..... [1]

(b) Milk can be used for making yoghurt.

- Bacteria are added to the milk. The milk is kept at a temperature of 40 °C.
- The bacteria convert lactose in the milk to lactic acid.
- When the pH has reached about 4.5, the yoghurt is moved to a refrigerator at a temperature of 3 °C.

(i) Explain why the milk is kept at a temperature of 40 °C after the bacteria have been added to it.

.....

.....

..... [2]

(ii) Suggest why the yoghurt is kept in a refrigerator at a temperature of 3 °C.

.....

..... [1]

(iii) Milk has a pH of about 6.5. Explain why the pH of milk changes during the manufacture of yoghurt.

.....

..... [1]

© UCLES 2013

[Turn over

www.theallpapers.com

For Examiner's Use

6 **(a)** In a store, two workers are lifting 5 kg bags of flour onto the shelves. There are five shelves, 0.4 m apart. The lowest shelf is 0.4 m from the floor.

Fig. 6.1 shows the two workers.

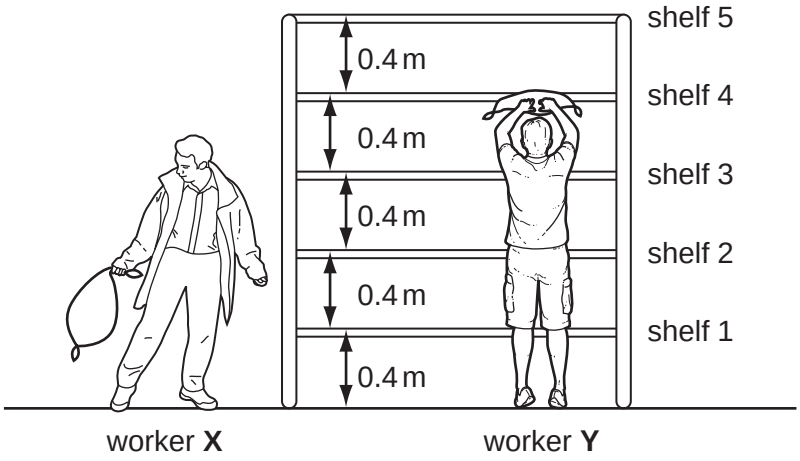

Fig. 6.1

(i) Worker **X** lifts three bags from the floor to shelf 2. Worker **Y** lifts one bag from the floor to shelf 5.

Worker **X** says that he has done more work than worker **Y**.

Use calculations of the work done to explain whether or not he is correct.

State the formula that you use.

formula

.....

..... [2]

(ii) Each worker lifts one bag from the floor to shelf 2. Worker **X** does this more quickly than worker **Y**.

Which worker exerted the higher power during their lift?

Explain your answer.

.....

..... [1]

© UCLES 2013

www.theallpapers.com

For Examiner's Use

(iii) Each 5 kg bag of flour has a volume of 5500 cm^3.

Calculate the average density of the bag of flour. State your answer in g/cm^3.

State the formula that you use and show your working.

formula

working

..... g/cm^3 [2]

(b) The store has a fire alarm, which detects an increase in temperature.

The fire alarm circuit has a resistor **R**, a thermistor and a buzzer connected to the battery shown in Fig. 6.2.

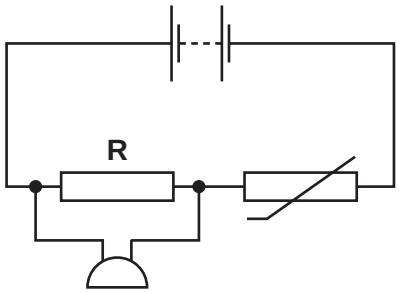

Fig. 6.2

Explain what happens to the current in the fire alarm circuit when the temperature increases.

.....

.....

.....

..... [3]

www.theallpapers.com

For Examiner's Use

(c) Three boys, **A**, **B** and **C**, walk together from their school to a store. They stay at the store for a few minutes and then return to school.

When they leave the store,

- one boy walks back to school at a steady pace,
- one boy walks back to school at a slower steady pace,
- one boy slows down gradually as he walks back to school.

The graph in Fig. 6.3 shows how their speeds vary with time.

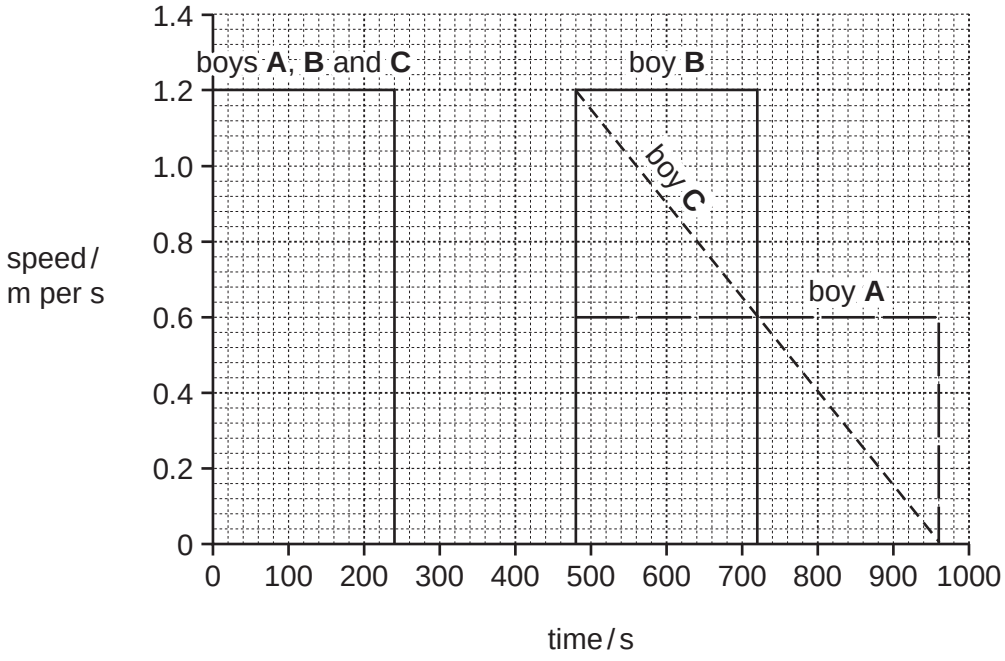

Fig. 6.3

(i) Calculate the distance of the store from the school.

Show your working.

..... [2]

(ii) For how many seconds do the boys stay in the store?

..... s [1]

(iii) Which boy slowed down on his way back to school?

Explain your answer.

.....

..... [1]

© UCLES 2013

www.theallpapers.com

For Examiner's Use

7 The metal vanadium is mixed with iron and carbon to make vanadium steel.

(a) (i) Vanadium metal may be obtained by reducing vanadium oxide with magnesium.

Suggest the **word** chemical equation for this reaction.

..... [1]

(ii) Vanadium is a transition metal and magnesium is in Group 2 of the Periodic Table.

Suggest **two** differences in properties between vanadium and magnesium.

1 .....

.....

2 .....

..... [2]

www.theallpapers.com

For Examiner's Use

(b) Sulfuric acid is made in industry by the Contact Process.

Fig. 7.1 shows a simplified flow diagram of part of the Contact Process.

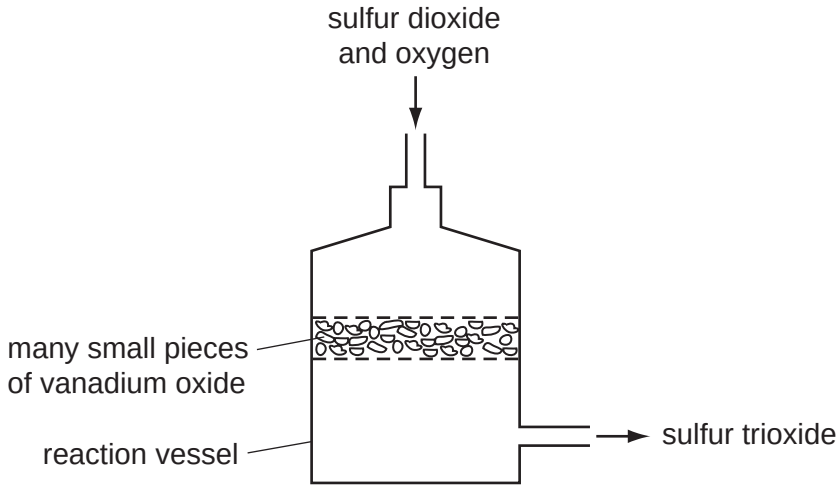

Fig. 7.1

A mixture of the gases sulfur dioxide and oxygen passes over the surface of solid vanadium oxide inside the reaction vessel.

The unbalanced equation for the reaction that occurs in the reaction vessel is shown below.

Balance the equation and explain why it does **not** contain the formula of vanadium oxide.

$$SO_2 \quad + \quad O_2 \longrightarrow \quad SO_3$$

explanation .....

.....

..... [2]

www.theallpapers.com

(c) 1.00 kg of a sample of concentrated sulfuric acid contains 98% by mass of H_2SO_4 molecules.

Calculate the number of moles of H_2SO_4 molecules in 1.00 kg of this sample of concentrated sulfuric acid.

Show your working.

For Examiner's Use

..... [3]

www.theallpapers.com

For Examiner's Use

8 The addition of a harmful substance to the environment is called pollution. Three examples of pollution caused by human activities are

- acid rain,
- fertilisers entering rivers and lakes,
- the release of too much carbon dioxide into the atmosphere.

(a) Describe how acid rain is caused.

.....

.....

.....

..... [2]

(b) Explain what happens in a lake after large quantities of fertilisers are washed into it.

.....

.....

.....

.....

.....

.....

..... [4]

(c) Explain how cutting down forests can result in an increase in the carbon dioxide concentration in the atmosphere.

.....

.....

.....

..... [2]

© UCLES 2013

www.theallpapers.com

For Examiner's Use

9 **(a)** Fig. 9.1 shows a mobile phone (cell phone) and battery charger.

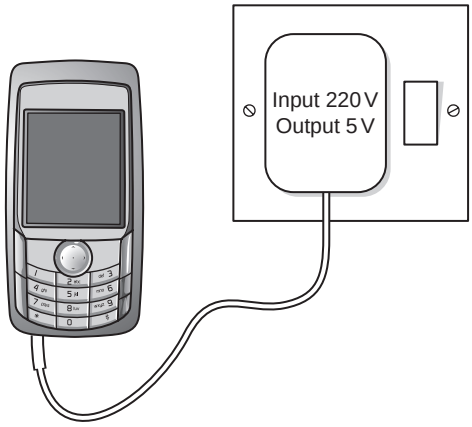

Fig. 9.1

A transformer inside the battery charger reduces the 220 V mains supply to the 5 V used to charge the mobile phone battery. The transformer has 40 turns on its secondary coil.

Calculate the number of turns on the primary coil of the transformer in the battery charger.

State the formula that you use and show your working.

formula

working

..... [2]

(b) Describe and explain how transformers are used in the large scale transmission of electricity.

.....

.....

.....

.....

.....

..... [3]

www.theallpapers.com

For Examiner's Use

10 (a) Fig. 10.1 shows apparatus a student used to investigate the reaction between a white powder and dilute hydrochloric acid.

The student predicted which gas would be given off in her experiment and chose to test the gas using limewater.

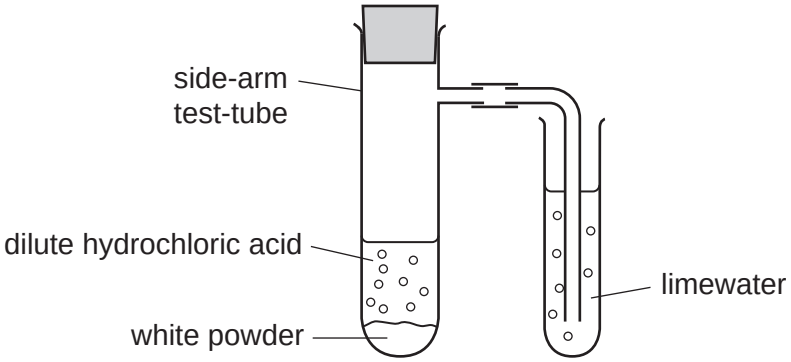

Fig. 10.1

State the gas that the student predicted would be given off.

Explain your answer.

name of gas .....

explanation .....

.....

..... [2]

www.theallpapers.com

Question 10 continues over the page.

www.theallpapers.com

For Examiner's Use

(b) The student investigated the temperature change when sodium hydrogencarbonate was added to excess dilute hydrochloric acid.

Fig. 10.2 shows the apparatus she used.

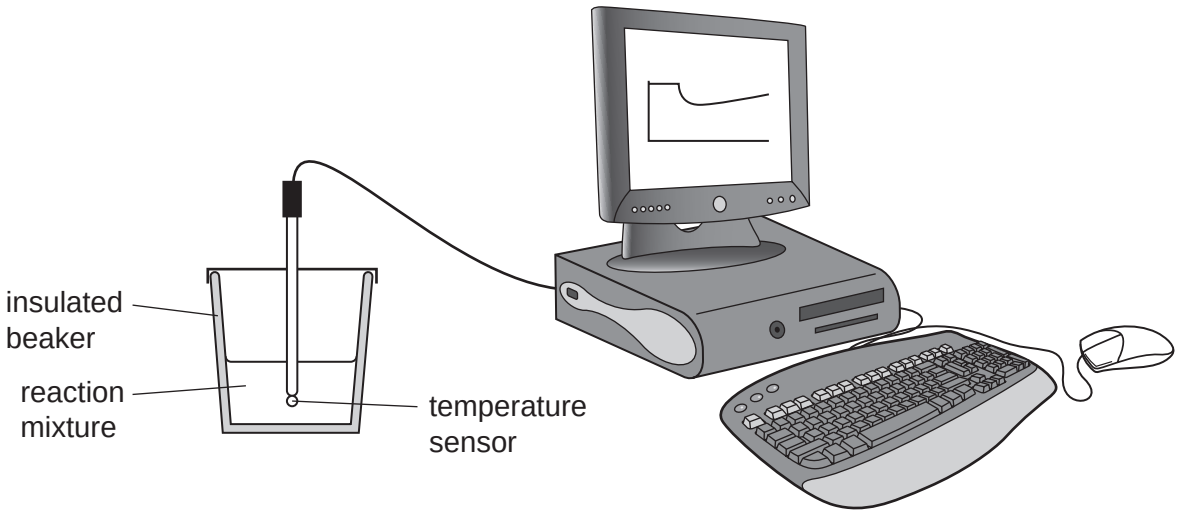

Fig. 10.2

Temperature measurements were displayed on the computer screen as a graph of temperature against time.

This graph is shown in Fig. 10.3.

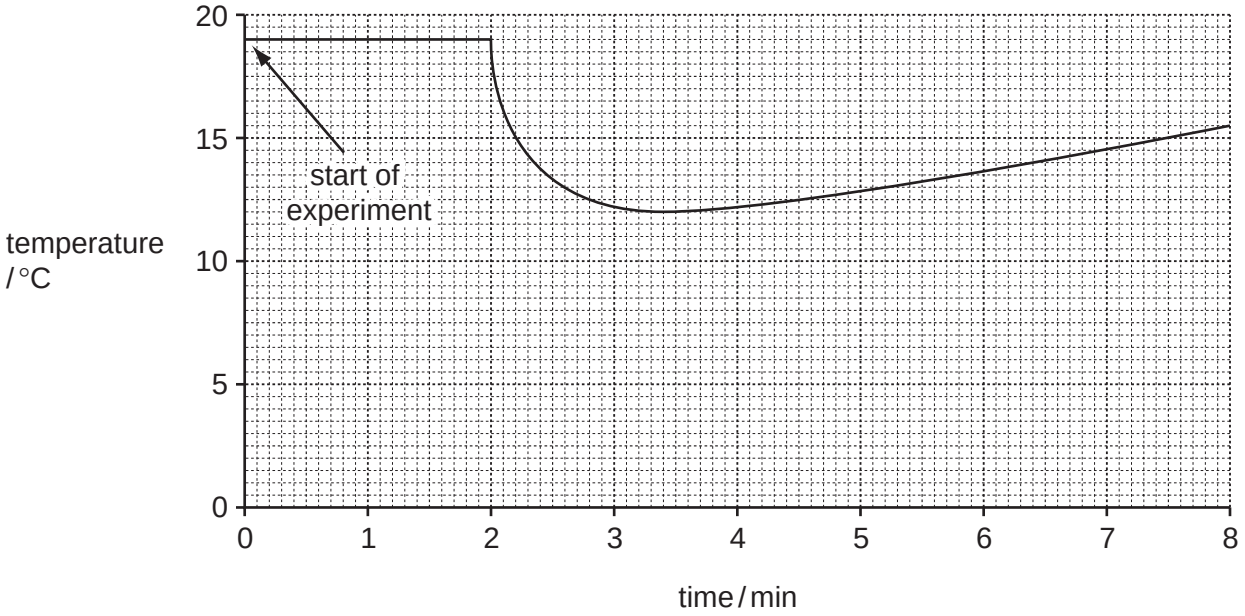

Fig. 10.3

(i) On the graph, mark with an **X** the point where sodium hydrogencarbonate was added to the dilute hydrochloric acid. [1]

(ii) Calculate the temperature change shown in Fig. 10.3 that occurred during the reaction.

..... [2]

www.theallpapers.com

For Examiner's Use

(iii) Use the results shown in Fig. 10.3 to explain, in terms of chemical energy and heat energy, the energy transformation that occurred during the reaction.

.....

.....

.....

..... [2]

(c) The student's teacher then set up the apparatus shown in Fig. 10.4 in a fume cupboard.

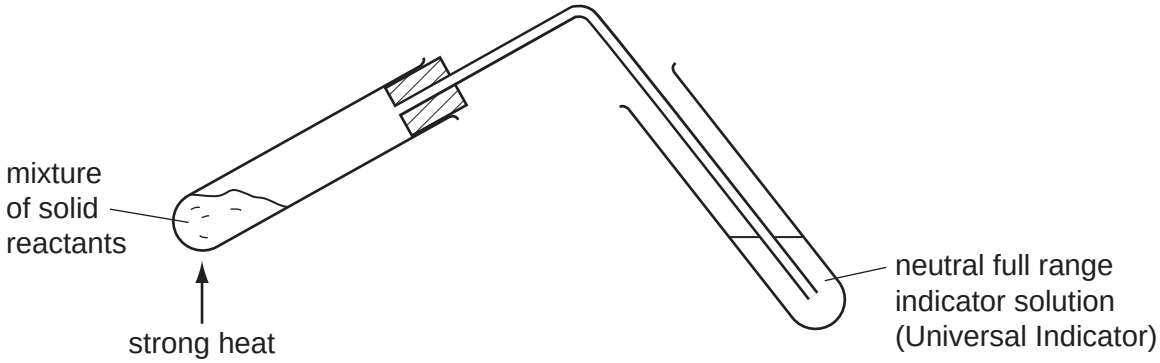

Fig. 10.4

The teacher heated the mixture of reactants. A gas was given off which did **not** change the colour of the indicator.

The teacher told the student

- that the gas was an oxide of carbon,
- that the relative formula mass of the gas molecules was 28.

(i) State and explain why the observation involving the indicator shows that the gas produced was **not** carbon dioxide.

.....

.....

..... [2]

(ii) Use the value of the relative formula mass to deduce the chemical formula of the gas produced in this experiment.

.....

.....

..... [2]

© UCLES 2013

www.theallpapers.com

11 Fig. 11.1 shows the human gas exchange system.

For Examiner's Use

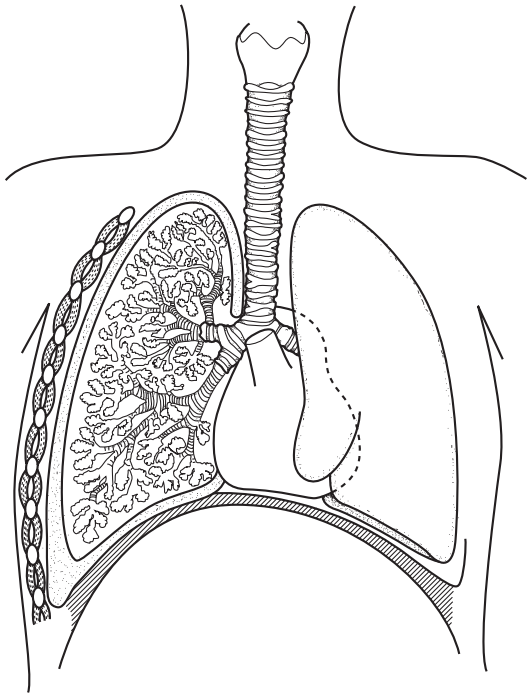

Fig. 11.1

(a) Use label lines to label each of these structures on Fig. 11.1.

trachea

bronchus

larynx [3]

(b) Gas exchange takes place across the surface of the alveoli in the lungs.

List **three** features of alveoli that help gas exchange to take place quickly.

1 .....

2 .....

3 ..... [3]

© UCLES 2013

www.theallpapers.com

For Examiner's Use

(c) The gas exchange system is protected from pathogens and harmful substances by a tissue, containing goblet cells and ciliated cells, that lines the nose, trachea and bronchi.

Fig. 11.2 shows part of this tissue inside the nose.

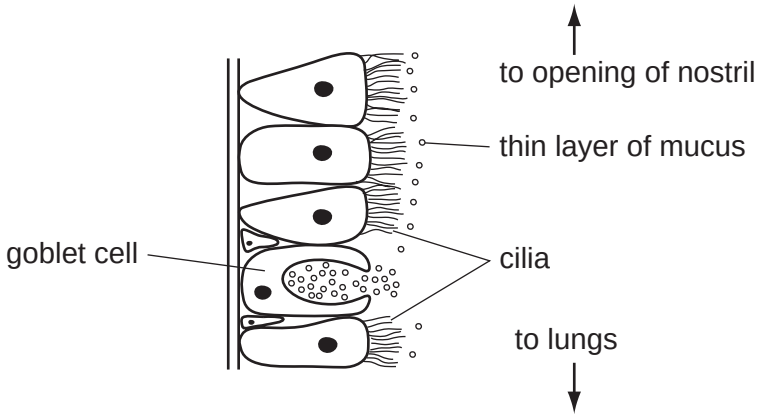

Fig. 11.2

Describe how the tissue shown in Fig. 11.2 helps to stop harmful substances getting into the lungs.

.....

.....

.....

..... [2]

www.theallpapers.com

For Examiner's Use

(d) An experiment was carried out to find out how passive smoking affects the activity of the goblet cells and cilia.

Six people sat in a closed room. On day **1**, they breathed normal, clean air. On day **2**, they breathed air containing cigarette smoke.

After one hour, an aerosol containing a radioactive isotope of technetium, ^{99}Tc, was sprayed into each person's nose. This isotope produces gamma radiation. The researchers measured the radioactivity in each person's nostrils for 40 minutes. This was done on both days.

The faster the cilia and goblet cells were working, the faster the ^{99}Tc was removed from the nose.

Table 11.1 shows the results.

Table 11.1

person	percentage of radioactivity remaining after 40 minutes	
	day **1** after breathing clean air	day **2** after breathing air containing cigarette smoke
1	65	26
2	84	49
3	67	96
4	23	51
5	40	91
6	78	24

(i) Suggest why the researchers used a source that emits gamma radiation, rather than one that emits alpha radiation.

.....

.....

.....

..... [2]

(ii) Which three persons' results showed that breathing air containing cigarette smoke slowed down the rate at which their cilia and goblet cells worked?

..... [1]

© UCLES 2013

www.theallpapers.com

(iii) Suggest how exposure to cigarette smoke could affect the health of these three people.

For Examiner's Use

.....

.....

.....

.....

.....

..... [4]

www.theallpapers.com

For Examiner's Use

12 (a) Electromagnetic waves are transverse waves.

Draw labelled diagrams to explain the difference between a transverse wave and a longitudinal wave.

[3]

(b) Fig. 12.1 shows a person using a periscope to look over a wall.

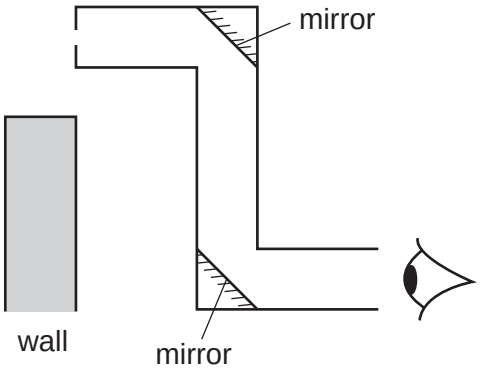

Fig. 12.1

(i) On Fig. 12.1 draw a ray diagram to explain how the person can see over the wall. [3]

www.theallpapers.com

For Examiner's Use

(ii) An image formed in a plane mirror is called a virtual image.

Explain the meaning of the term *virtual image*.

.....

..... [1]

(c) Fig. 12.2 shows a lens being used to observe an object **O**.

The focal length of the lens is 3.0 cm. The diagram is drawn full scale.

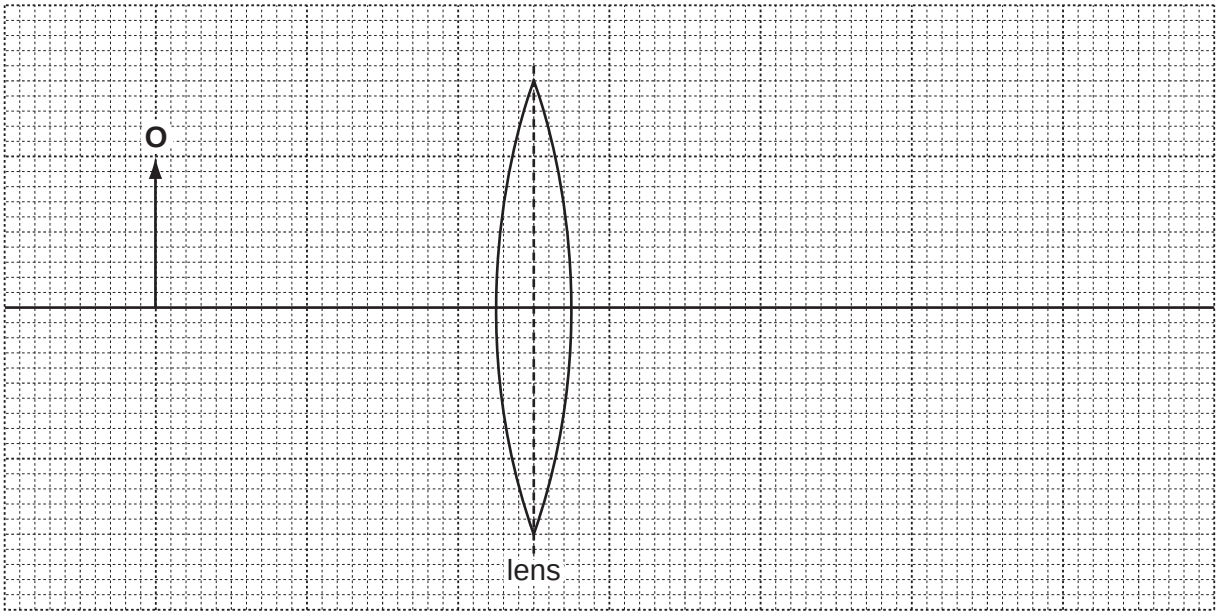

Fig. 12.2

(i) On Fig. 12.2 draw **two** rays from the top of the object **O** that meet at the image.

Label the image **X**. [3]

(ii) Measure the height of the object **O** and the height of the image **X**.

object height ..... image height ..... [1]

(iii) Calculate the magnification.

Show your working.

[2]

www.theallpapers.com

BLANK PAGE

© UCLES 2013

www.theallpapers.com

BLANK PAGE

www.theallpapers.com

DATA SHEET
The Periodic Table of the Elements

Group																	
I	II									III	IV	V	VI	VII	0
															4 He Helium 2
					1 H Hydrogen 1										
7 Li Lithium 3	9 Be Beryllium 4									11 B Boron 5	12 C Carbon 6	14 N Nitrogen 7	16 O Oxygen 8	19 F Fluorine 9	20 Ne Neon 10
23 Na Sodium 11	24 Mg Magnesium 12									27 Al Aluminium 13	28 Si Silicon 14	31 P Phosphorus 15	32 S Sulfur 16	35.5 Cl Chlorine 17	40 Ar Argon 18
39 K Potassium 19	40 Ca Calcium 20	45 Sc Scandium 21	48 Ti Titanium 22	51 V Vanadium 23	52 Cr Chromium 24	55 Mn Manganese 25	56 Fe Iron 26	59 Co Cobalt 27	59 Ni Nickel 28	64 Cu Copper 29	65 Zn Zinc 30	70 Ga Gallium 31	73 Ge Germanium 32	75 As Arsenic 33	79 Se Selenium 34	80 Br Bromine 35	84 Kr Krypton 36
85 Rb Rubidium 37	88 Sr Strontium 38	89 Y Yttrium 39	91 Zr Zirconium 40	93 Nb Niobium 41	96 Mo Molybdenum 42	Tc Technetium 43	101 Ru Ruthenium 44	103 Rh Rhodium 45	106 Pd Palladium 46	108 Ag Silver 47	112 Cd Cadmium 48	115 In Indium 49	119 Sn Tin 50	122 Sb Antimony 51	128 Te Tellurium 52	127 I Iodine 53	131 Xe Xenon 54
133 Cs Caesium 55	137 Ba Barium 56	139 La Lanthanum 57 *	178 Hf Hafnium 72	181 Ta Tantalum 73	184 W Tungsten 74	186 Re Rhenium 75	190 Os Osmium 76	192 Ir Iridium 77	195 Pt Platinum 78	197 Au Gold 79	201 Hg Mercury 80	204 Tl Thallium 81	207 Pb Lead 82	209 Bi Bismuth 83	Po Polonium 84	At Astatine 85	Rn Radon 86
Fr Francium 87	226 Ra Radium 88	227 Ac Actinium 89 †															

140 Ce Cerium 58	141 Pr Praseodymium 59	144 Nd Neodymium 60	Pm Promethium 61	150 Sm Samarium 62	152 Eu Europium 63	157 Gd Gadolinium 64	159 Tb Terbium 65	162 Dy Dysprosium 66	165 Ho Holmium 67	167 Er Erbium 68	169 Tm Thulium 69	173 Yb Ytterbium 70	175 Lu Lutetium 71
232 Th Thorium 90	Pa Protactinium 91	238 U Uranium 92	Np Neptunium 93	Pu Plutonium 94	Am Americium 95	Cm Curium 96	Bk Berkelium 97	Cf Californium 98	Es Einsteinium 99	Fm Fermium 100	Md Mendelevium 101	No Nobelium 102	Lr Lawrencium 103

*58-71 Lanthanoid series
†90-103 Actinoid series

Key: a = relative atomic mass; X = atomic symbol; b = proton (atomic) number

The volume of one mole of any gas is 24 dm^3 at room temperature and pressure (r.t.p.).

Permission to reproduce items where third-party owned material protected by copyright is included has been sought and cleared where possible. Every reasonable effort has been made by the publisher (UCLES) to trace copyright holders, but if any items requiring clearance have unwittingly been included, the publisher will be pleased to make amends at the earliest possible opportunity.

University of Cambridge International Examinations is part of the Cambridge Assessment Group. Cambridge Assessment is the brand name of University of Cambridge Local Examinations Syndicate (UCLES), which is itself a department of the University of Cambridge.

© UCLES 2013

www.theallpapers.com