UNIVERSITY OF CAMBRIDGE INTERNATIONAL EXAMINATIONS
International General Certificate of Secondary Education

CANDIDATE NAME

CENTRE NUMBER

CANDIDATE NUMBER

0677040343

CO-ORDINATED SCIENCES **0654/61**

Paper 6 Alternative to Practical **May/June 2012**

1 hour

Candidates answer on the Question paper

No Additional Materials are required.

READ THESE INSTRUCTIONS FIRST

Write your Centre number, candidate number and name on all the work you hand in.
Write in dark blue or black pen.
You may use a soft pencil for any diagrams, graphs, tables or rough working.
Do not use staples, paper clips, highlighters, glue or correction fluid.
DO **NOT** WRITE IN ANY BARCODES.

Answer **all** questions.

At the end of the examination, fasten all your work securely together.
The number of marks is given in brackets [ ] at the end of each question or part question.

For Examiner's Use	
1	
2	
3	
4	
5	
6	
Total	

This document consists of **21** printed pages and **3** blank pages.

© UCLES 2012

www.theallpapers.com

For Examiner's Use

1 A student investigated the effect of light on the chemical composition of leaves. Two plants of the same species were used. Leaf **A** had been removed from a plant that had been in strong light for a period of 24 hours. Leaf **B** had been removed from a plant that had been kept in the dark for 48 hours.

- The student picked up leaf **A** with a pair of tweezers and carefully held it in very hot water for 15 seconds. He carried out the same procedure for leaf **B**.
- He placed the leaves separately into the bottom of two large tubes labelled **A** and **B**.
- The leaves were covered with alcohol (ethanol) and the tubes placed into a very hot water bath for 5 minutes.
- He removed the tubes from the water bath and poured off the alcohol into a beaker.

(a) He noted that the colour of the alcohol, that had been poured off, had turned green in colour. The leaves were now white in colour.

(i) Suggest what substance from the leaf has dissolved in the alcohol.

substance ..... [1]

- He placed leaves **A** and **B** into separate petri dishes, laid them flat and covered them in iodine solution for two minutes.
- He removed the excess iodine solution by washing the leaves with cold water.

(ii) Suggest, and record in Table 1.1, the colour of the leaves after they had been tested with iodine solution.

For each leaf, what conclusion may be made from your suggested colours?

Record your conclusion for each leaf in Table 1.1.

Table 1.1

	leaf A	**leaf B**
colour of leaf after testing with iodine solution		
conclusion		

[4]

© UCLES 2012

www.theallpapers.com

For Examiner's Use

(b) The student carried out a second experiment:

- He took four pieces of pond weed and placed them into separate beakers labelled **C**, **D**, **E** and **F**.
- He placed a funnel over each piece of pond weed.
- He placed measuring cylinders full of water over the funnels to collect any gases produced, as in Fig. 1.1.
- Beakers **C**, **D**, and **E** were placed in strong light for 48 hours.
- Beaker **F** was kept in the dark for 48 hours.

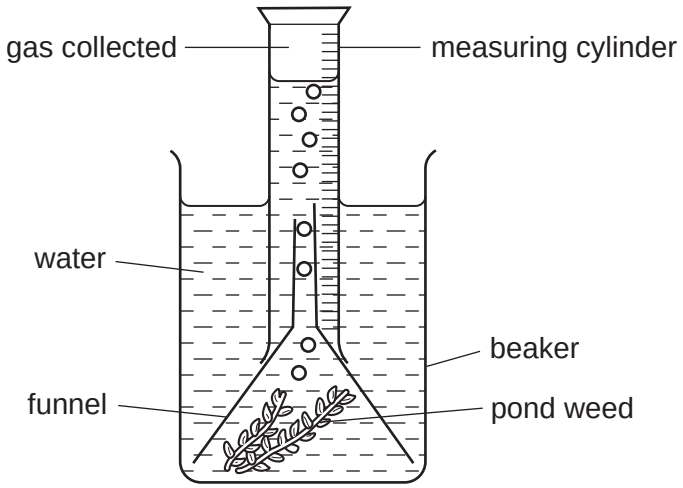

Fig. 1.1

Fig. 1.2 shows the measuring cylinders after the experiment.

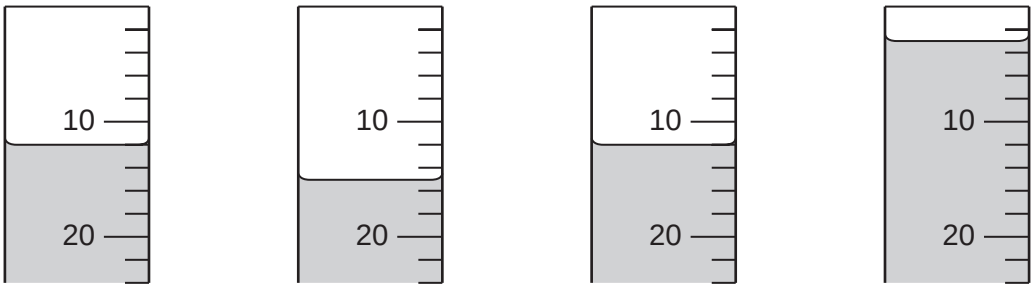

Fig. 1.2

(i) Record the volumes of gas in all four measuring cylinders in Table 1.2.

Table 1.2

measuring cylinder	**C**	**D**	**E**	**F**
volume of gas / cm^3				

[2]

www.theallpapers.com

For Examiner's Use

(ii) The student took a glowing splint and placed it into the gas that had been collected. The splint relit when placed into tubes **C**, **D** and **E**.

State the name of the gas that had been produced.

name of gas ..... [1]

(iii) The gas present in tube **F** did not relight the glowing splint.

Suggest what this gas could be and name the process that produced it.

name of gas .....

process ..... [2]

© UCLES 2012

www.theallpapers.com

For Examiner's Use

2 **(a)** You are going to find the cross-sectional area of a resistance wire.

A circuit was set up as shown as in Fig. 2.1.

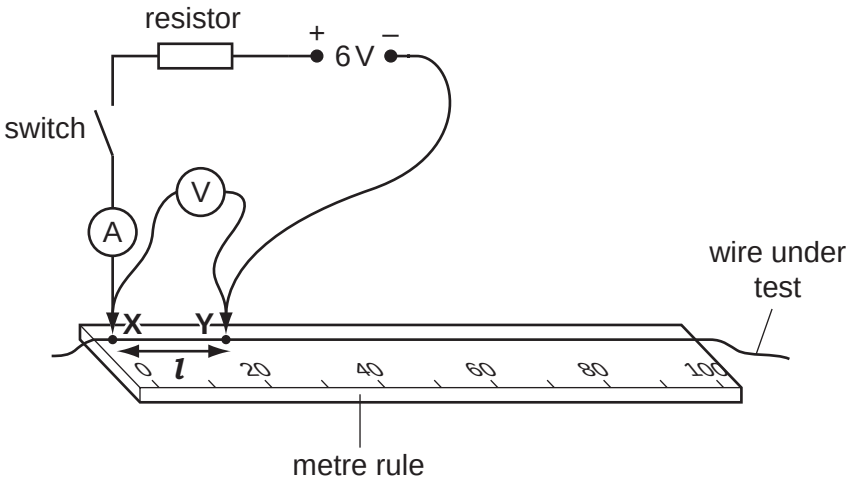

Fig. 2.1

- Point **X** at one end of the resistance wire is level with the 0 cm mark of the metre rule.
- A crocodile clip is attached to the wire at point **Y**, 20 cm from point **X**.
- The current, ***I***, on the ammeter and the potential difference, ***V***, on the voltmeter are read and recorded in Table 2.1.
- The crocodile clip at point **Y** is moved further away from point **X**.
- The new length, ***l***, is measured and ammeter and voltmeter readings taken and recorded in Table 2.1.
- This is repeated until there are five sets of results.

© UCLES 2012

[Turn over
www.theallpapers.com

For Examiner's Use

Table 2.1

length of wire, l / cm	potential difference, V / volts	current, I / amps	resistance, R / ohms
20	0.86	0.33	
40	1.47	0.28	
60	1.89	0.24	
80			
100	2.44	0.19	

(i) Fig. 2.2 shows the potential difference, V, and the current, I, when the length, l, is 80 cm.

Read the values and record them in Table 2.1. [2]

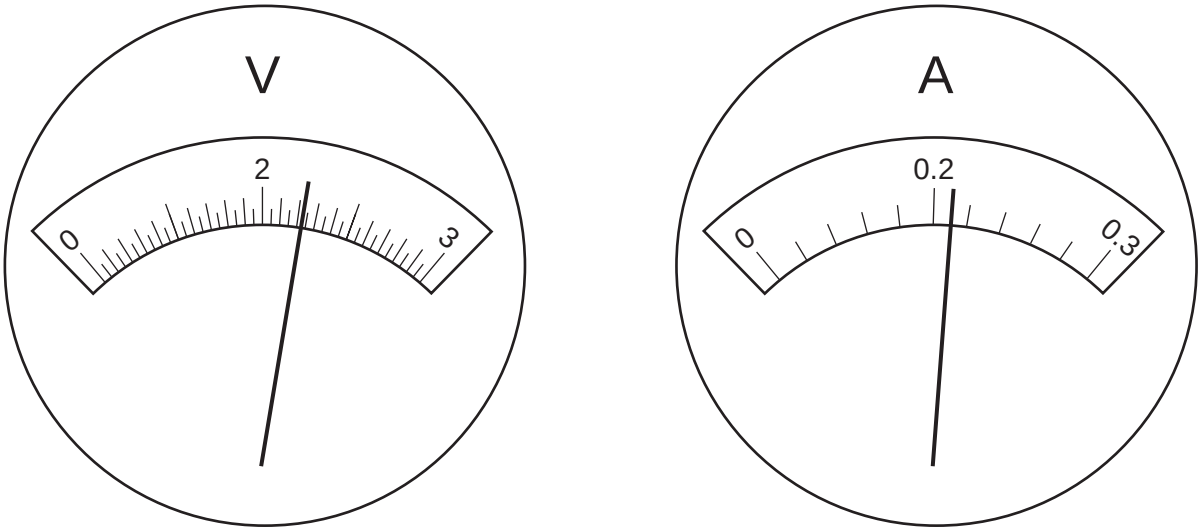

Fig. 2.2

(ii) Calculate the resistance, **R**, of each length of the resistance wire using the formula and complete the last column of Table 2.1.

$$R = \frac{V}{I}$$

[2]

www.theallpapers.com

(b) (i) On the grid below, plot a graph of resistance, **R** against the length of the wire, ***l***.

Draw a straight line of best fit. Your line should pass through the origin (0,0).

For Examiner's Use

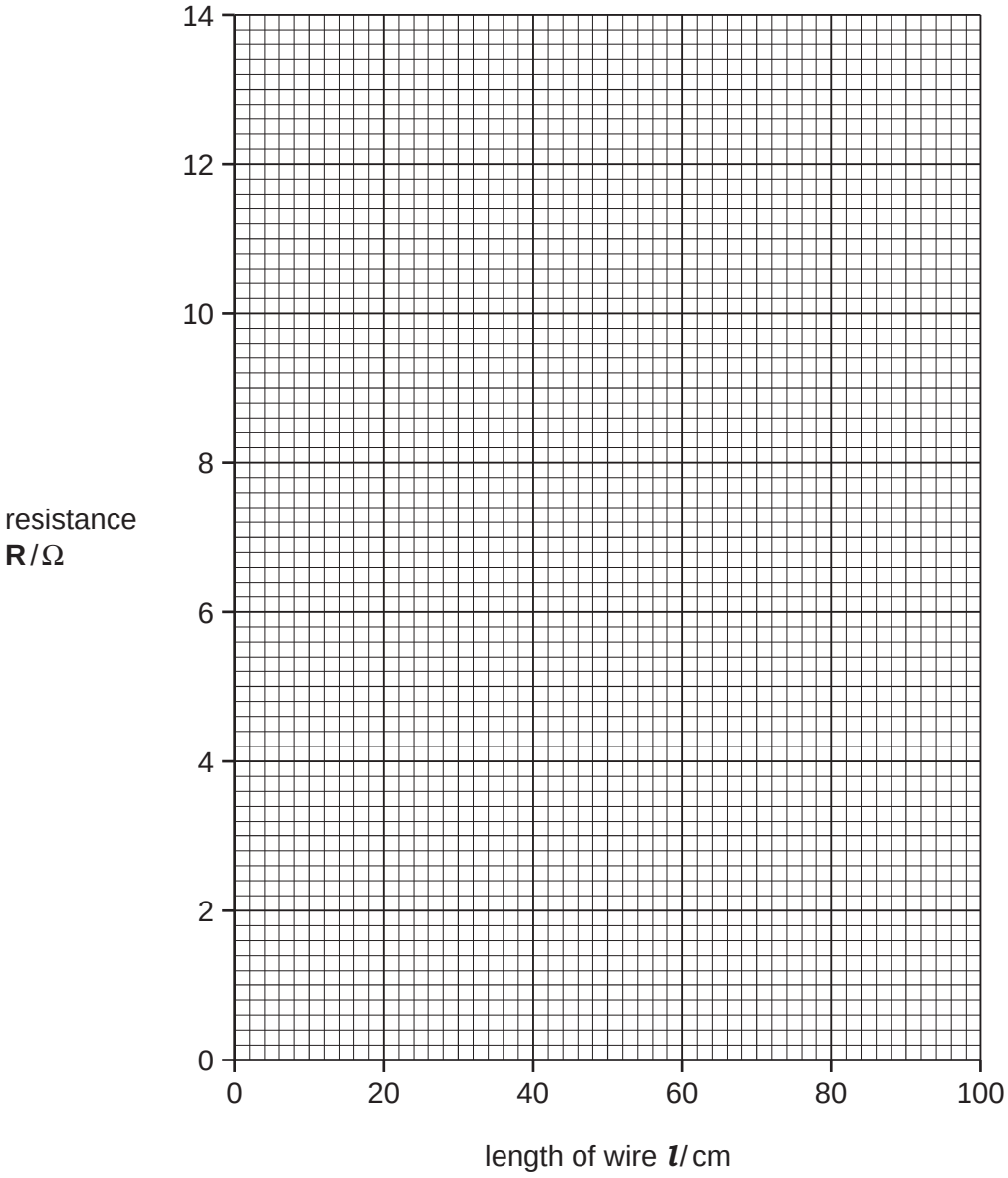

[2]

(ii) Find the gradient of the line you have drawn and show clearly your working on the graph or below.

gradient = ... [2]

www.theallpapers.com

For Examiner's Use

(iii) Calculate the cross-sectional area, **C**, of the resistance wire using the formula given.

$$\mathbf{C} = \frac{0.000\,049}{\text{gradient}}$$

C = ... cm^2 [1]

(iv) Predict how the resistance, **R**, would change if a wire of the same material but greater cross-sectional area is used.

resistance, **R**, would ..... [1]

www.theallpapers.com

BLANK PAGE

Please turn over for Question 3.

www.theallpapers.com

For Examiner's Use

3 **(a)** **(i)** A student is given solid mixture **A** to investigate. It contains two cations and two anions.

- He places the mixture **A** into a 100 cm^3 beaker and adds about 30 cm^3 of purified water.
- After stirring, he filters the mixture into three test-tubes for use in **(b)**.
- The residue is green and the filtrate is colourless.
- He scrapes the residue from the filter paper into a fresh test-tube and adds a little dilute hydrochloric acid.
- Bubbles of carbon dioxide gas are produced and the residue dissolves forming a solution.

Describe a test, and give the result that shows the gas is carbon dioxide and suggest an anion present in solid **A**.

test .....

result .....

anion present ..... [3]

(ii) To this solution from the residue in **(a)(i)** the student adds aqueous sodium hydroxide, drop by drop until there is no further change.

A blue precipitate is formed.

Name the cation present.

..... [1]

(b) The student now takes the three test-tubes of the filtrate prepared in **(a)(i)**. The filtrate is colourless.

(i) To the first test-tube of filtrate he tests for the presence of the sulfate ion.

Describe a test for sulfate ions and give the result expected if **no** sulfate ions are present.

test .....

result ..... [2]

(ii) To the second test-tube of filtrate he adds a few drops of acidified silver nitrate.

A white precipitate is formed.

Name the anion present.

..... [1]

© UCLES 2012

www.theallpapers.com

For Examiner's Use

(iii) To the final test-tube of filtrate, the student adds 3 cm^3 aqueous sodium hydroxide. No precipitate is formed. He warms it gently for a few minutes, then holds a piece of damp red litmus paper over the mouth of the test-tube.

There is no change.

This shows the absence of which cation?

..... [1]

(c) Suggest a possible identity of the second cation present in solid **A**.

cation .....

Explain your answer using the information in **(b)(iii)**.

.....

..... [2]

www.theallpapers.com

For Examiner's Use

4 **(a)** A student used apparatus to investigate how breathing was affected by exercise. In this apparatus the experimenter breathes in and out of the apparatus through a tube. The volume of air breathed in and out over time is measured and displayed on an oscilloscope.

The student did the first reading while resting. The oscilloscope trace is shown in Fig. 4.1.

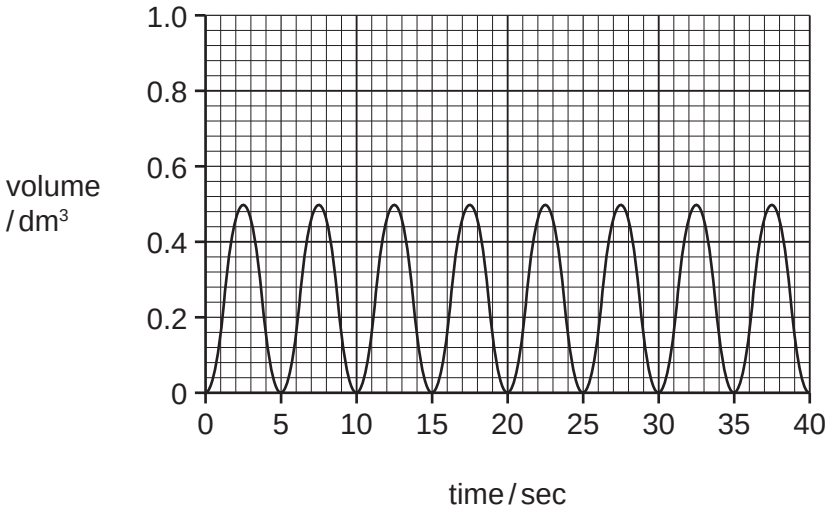

Fig. 4.1

(i) What is the volume of air inhaled in one breath?

..... [1]

(ii) Calculate how many breaths the student took in one minute.

breaths in one minute = ... [1]

(iii) Calculate the total volume of air inhaled in one minute.

total volume air inhaled in one minute = ... [1]

© UCLES 2012

www.theallpapers.com

For Examiner's Use

(b) The student did some exercise then took some readings using the same apparatus. The oscilloscope trace of his results is shown in Fig. 4.2.

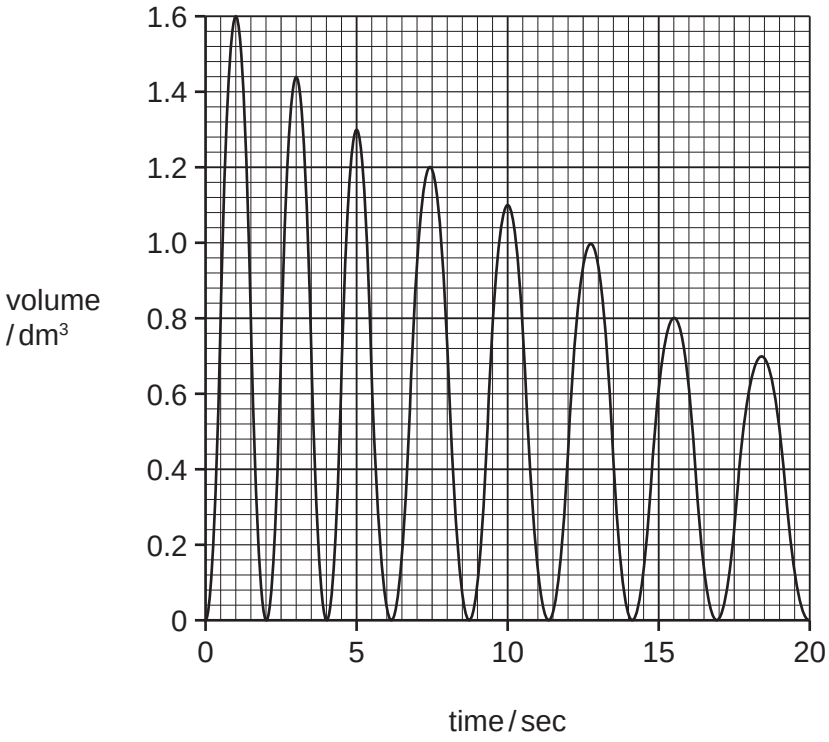

Fig. 4.2

(i) Study the two oscilloscope traces. Describe **two** differences between them.

.....

.....

..... [2]

(ii) What volume of air was inhaled in the first breath after exercise?

..... [1]

(iii) Explain why this volume was different from the volume inhaled while resting.

.....

.....

..... [2]

© UCLES 2012

[Turn over

www.theallpapers.com

(c) In the apparatus the exhaled air is not breathed back in again during the experiment.

Give **two** reasons why it would be undesirable to breathe the exhaled air back in.

.....

.....

..... [2]

For Examiner's Use

www.theallpapers.com

For Examiner's Use

5 A student is investigating by how much metal rods expand when heated.

He has rods of copper, aluminium and tungsten.

He knows that the metals expand by very small amounts so he uses the apparatus in Fig. 5.1. As the rod expands it increases in length, the pointer moves around the pivot magnifying the expansion and making it easier to read.

He uses the gas burner to heat the rod, until the temperature sensor records a 100 °C rise in temperature.

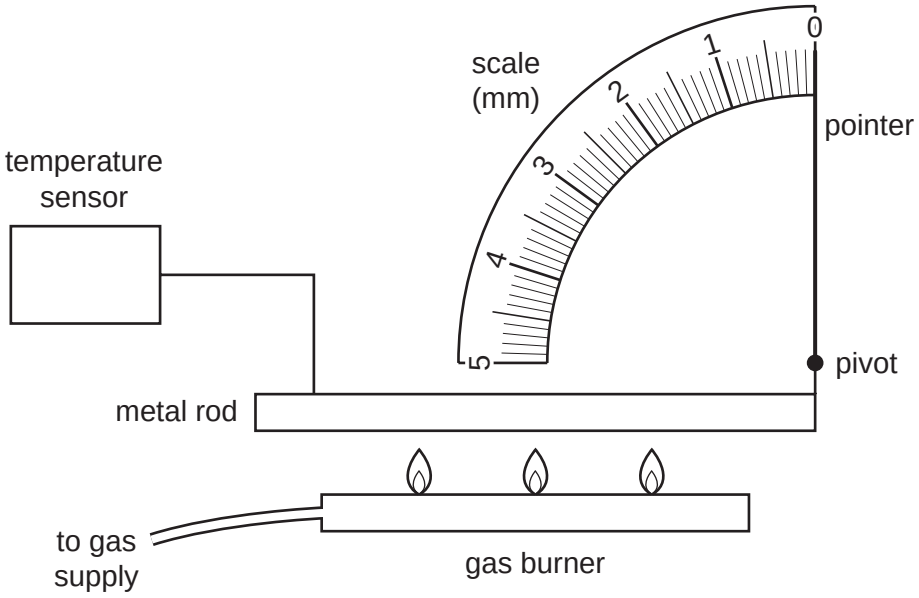

Fig. 5.1

The first rod is made of copper and is exactly 500 mm in length. He heats it, raising the temperature by 100 °C.

(a) (i) Read the increase in length for the copper rod in Fig. 5.2 and complete the first row of Table 5.1. [1]

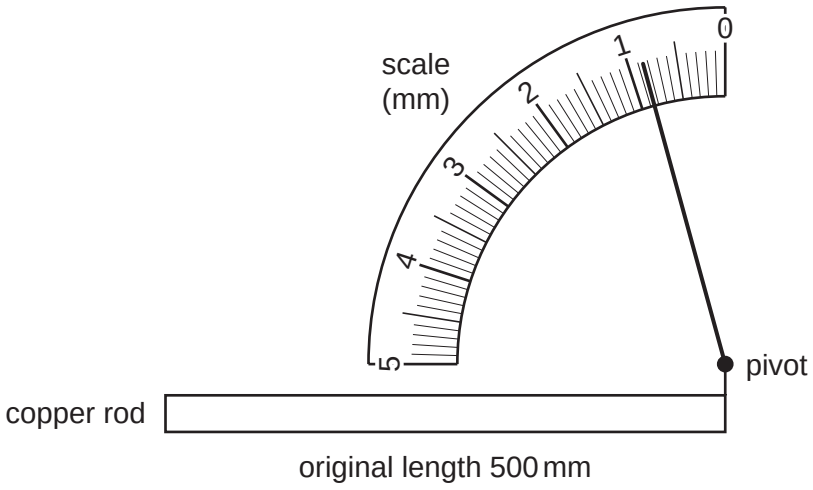

Fig. 5.2

www.theallpapers.com

For Examiner's Use

Table 5.1

metal	original length, L / mm	increase in length, l_e / mm
copper		
aluminium		
tungsten		

(ii) Fig. 5.3 and Fig. 5.4 show the results for aluminium and tungsten when heated by 100 °C.

Complete the second and third rows of Table 5.1. [2]

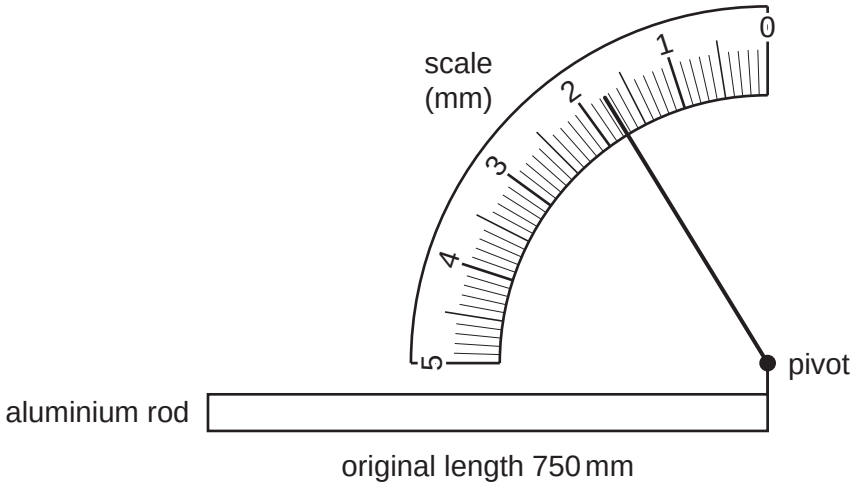

Fig. 5.3

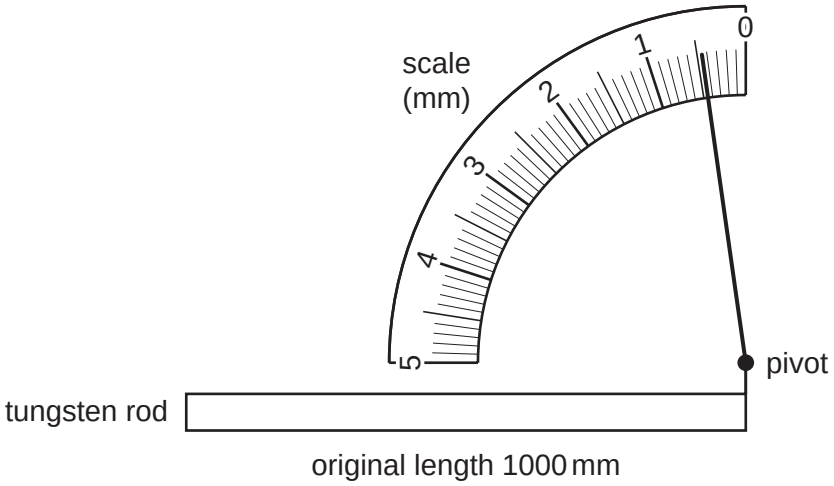

Fig. 5.4

www.theallpapers.com

For Examiner's Use

(b) (i) To compare the expansion of the rods the student works out, **E**, the increase in length of a one metre long piece of each metal when its temperature is raised by 1 °C using the following equation. This is known as the coefficient of thermal expansion.

$$\mathbf{E} = \frac{l_e}{\mathbf{L} \times \mathbf{t}}$$

where l_e is the increase in length
L is the original length
and **t** is the temperature rise

Use the space below to work out the values of **E**, for each metal.

Show your working.

E for copper = ...

E for aluminium = ...

E for tungsten = ... [3]

(ii) State the unit for **E**. ..... [1]

(iii) Some sensitive scientific instruments contain metal parts that work efficiently only if they expand very little when the temperature rises.

Which of the three metals tested would be best for use in these instruments?

..... [1]

© UCLES 2012

[Turn over

www.theallpapers.com

(c) Sometimes, in everyday life expansion of metals can be useful and at other times it can be a problem.

For Examiner's Use

(i) Suggest **one** example of when expansion of metals can be useful.

..... [1]

(ii) Suggest **one** example when expansion of metals is a problem.

..... [1]

© UCLES 2012

www.theallpapers.com

6 Below are labels from two bottles of household cleaners.

For Examiner's Use

A student planned to investigate how much of the ingredient, sodium hydroxide, is present in both bottles.

Fig. 6.1

Using a pipette she measured 25.0 cm^3 of *Bugoff* into a conical flask. She slowly added 1.0 mol/dm^3 hydrochloric acid from a burette, until the indicator showed a neutral solution, as shown in Fig. 6.2.

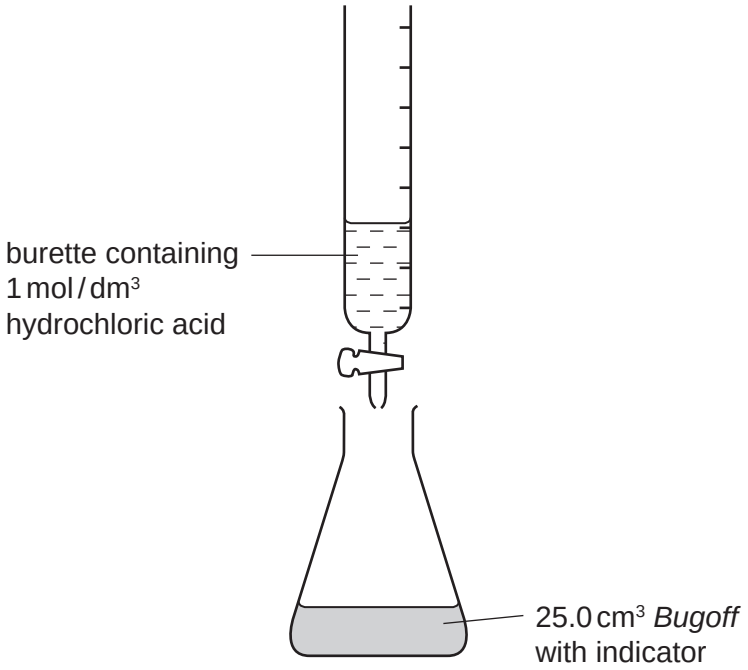

Fig. 6.2

www.theallpapers.com

For Examiner's Use

(a) (i) Universal Indicator was used as the indicator in the flask. What colour change would occur when the acid is slowly added?

.....

[1]

(ii) The student repeated the experiment three times for *Bugoff*, each time refilling the burette and recording the start and end values of the acid, in Table 6.1.

Complete Table 6.1 by calculating the volume of hydrochloric acid used in the second and third experiments.

Calculate the average volume of hydrochloric acid used.

[2]

Table 6.1

experiment	**1**	**2**	**3**	**average**
burette reading at end / cm^3	20.8	21.4	22.6	
burette reading at start / cm^3	0.7	1.0	2.1	
hydrochloric acid added / cm^3	20.1			

(iii) Use the formula below to calculate the concentration of the sodium hydroxide.

$$\text{concentration of sodium hydroxide} = \frac{\text{average volume of acid used}}{25.0}$$

concentration = ... mol/dm^3 [1]

www.theallpapers.com

For Examiner's Use

(b) The student repeated the experiment but this time used 25.0 cm^3 of undiluted *Bugs-no-more*.

Her results are shown in Table 6.2.

Table 6.2

experiment	1	2	3	average
burette reading at end / cm^3	48.8	50.0	49.6	
burette reading at start / cm^3	0.5	1.2	1.5	
hydrochloric acid added / cm^3				

(i) Complete Table 6.2 by calculating the volume of acid added in each experiment.

Calculate the average volume used.

[2]

(ii) Using the same formula as in **(a)(iii)** calculate the concentration of sodium hydroxide in *Bugs-no-more*.

concentration = ... mol / dm^3 [1]

(c) The instructions on *Bugs-no-more* says 'Take 1 capful (5 cm^3) and make up to 25 cm^3'.

This means that 20 cm^3 of water is added to 5 cm^3 *Bugs-no-more* before use.

Use your answer to **(b)(ii)** to calculate the concentration of sodium hydroxide in *Bugs-no-more* after it has been diluted.

= ..... mol / dm^3 [1]

© UCLES 2012

[Turn over

www.theallpapers.com

For Examiner's Use

(d) Sodium hydroxide can be used to remove animal fats.

When used as instructed on the label which cleaner is likely to be more effective in fat removal?

Explain your answer.

.....

..... [1]

(e) The word equation for the reaction in the experiment is

sodium hydroxide + hydrochloric acid = sodium chloride + water

Write the balanced symbol equation for this reaction.

..... [1]

© UCLES 2012

www.theallpapers.com

BLANK PAGE

© UCLES 2012

www.theallpapers.com

BLANK PAGE

Permission to reproduce items where third-party owned material protected by copyright is included has been sought and cleared where possible. Every reasonable effort has been made by the publisher (UCLES) to trace copyright holders, but if any items requiring clearance have unwittingly been included, the publisher will be pleased to make amends at the earliest possible opportunity.

University of Cambridge International Examinations is part of the Cambridge Assessment Group. Cambridge Assessment is the brand name of University of Cambridge Local Examinations Syndicate (UCLES), which is itself a department of the University of Cambridge.

www.theallpapers.com