UNIVERSITY OF CAMBRIDGE INTERNATIONAL EXAMINATIONS
International General Certificate of Secondary Education

CANDIDATE NAME	

CENTRE NUMBER						CANDIDATE NUMBER				

6146709691

CO-ORDINATED SCIENCES **0654/52**

Paper 5 Practical Test **May/June 2010**

2 hours

Candidates answer on the Question Paper.

Additional Materials: As listed in Instructions to Supervisors

READ THESE INSTRUCTIONS FIRST

Write your Centre number, candidate number and name on all the work you hand in.
Write in dark blue or black pen.
You may use a pencil for any diagrams, graphs or rough working.
Do not use staples, paper clips, highlighters, glue or correction fluid.
DO **NOT** WRITE IN ANY BARCODES.

Answer **all** questions.
Chemistry practical notes for this paper are printed on page 12.

At the end of the examination, fasten all your work securely together.
The number of marks is given in brackets [ ] at the end of each question or part question.

For Examiner's Use	
1	
2	
3	
Total	

This document consists of **12** printed pages.

© UCLES 2010

UNIVERSITY of CAMBRIDGE International Examinations

[Turn over

www.theallpapers.com

For Examiner's Use

1 This question is about variation in leaves.

(a) You are provided with 20 leaves of the same species. Measure the length ***l*** of each leaf in millimetres as shown in Fig. 1.1a. If the lamina does not meet the petiole evenly on either side of the leaf use the longer measurement. See Fig. 1.1b.

Enter your measurements in Table 1.1.

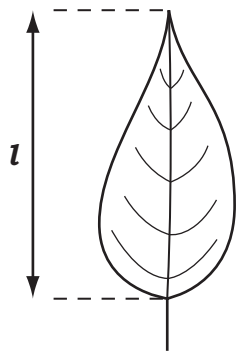

Fig. 1.1a

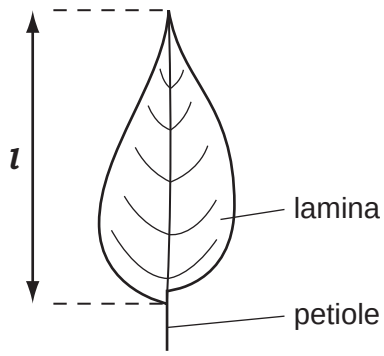

Fig. 1.1b

Table 1.1

length of leaf *l* / mm			
1		**11**	
2		**12**	
3		**13**	
4		**14**	
5		**15**	
6		**16**	
7		**17**	
8		**18**	
9		**19**	
10		**20**	

[2]

(b) Calculate the average (mean) length of the 20 leaves. Show your working.

average = ... mm [2]

www.theallpapers.com

(c) **(i)** Enter the number of leaves in each range in Table 1.2 below. [2]

For Examiner's Use

Table 1.2

range / mm	number of leaves in range	range / mm	number of leaves in range
30 - 34		90 - 94	
35 - 39		95 - 99	
40 - 44		100 - 104	
45 - 49		105 - 109	
50 - 54		110 - 114	
55 - 59		115 - 119	
60 - 64		120 - 124	
65 - 69		125 - 129	
70 - 74		130 - 139	
75 - 79		140 - 144	
80 - 84		145 - 149	
85 - 89		150 - 154	

(ii) Use the information you have entered in Table 1.2 to draw a bar chart on the grid provided. Use the **number of leaves in range** as the vertical axis and the **range / mm** as the horizontal axis. Choose suitable scales for your data.

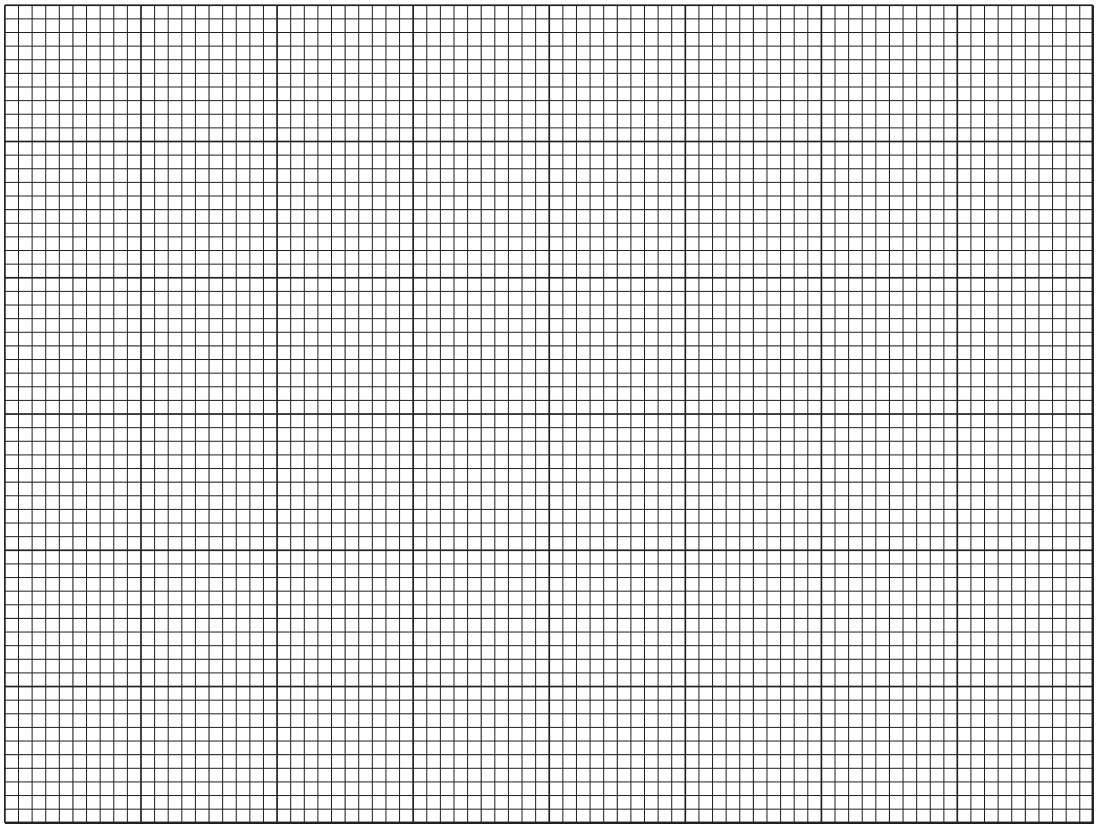

[3]

www.theallpapers.com

For Examiner's Use

(d) The difference between the greatest length and the smallest length is the range.

Complete the following.

the greatest length = ... mm

the smallest length = ... mm

the range = ... mm [1]

(e) Use the grid provided on page 5 to estimate the area of **one** of the leaves. The area of each square is 1 cm^2.

- Place the leaf on the grid provided.
- Carefully draw round the leaf then remove it.
- Write the letter **C** in the **complete** squares. Count the number of complete squares.

  number of complete (**C**) squares = ...

- Write the letter **P** in any incomplete squares that have an area of half a square or more.

  number of incomplete (**P**) squares = ...

- Ignore the rest of the squares.
- Add **C** + **P** to estimate the area of the leaf.

leaf area = ... cm^2 [1]

www.theallpapers.com

For Examiner's Use

[2]

(f) The leaves in the sample were all of the same species yet they showed variation in length.

Suggest and explain a reason for this.

reason .....

explanation .....

..... [2]

www.theallpapers.com

For Examiner's Use

2 You are going to find the specific heat capacity of the material of a can. The specific heat capacity of a material is the heat energy required to raise 1 g of the material by 1 ºC.

(a) Find the mass of the can to the nearest gram.

Record its mass below.

mass of can, $\mathbf{m_1}$ = ... g [1]

(b) Place the lagging around the can. Place the thermometer inside the can and leave for two minutes. Read the temperature, $\mathbf{t_1}$, to the nearest 0.5 ºC and record it below.

temperature of can, $\mathbf{t_1}$ = ... ºC [1]

(c) **(i)** Heat enough water in a beaker to about one-third fill the can. When the temperature is just above 70 ºC, remove the Bunsen. As soon as the temperature of the water has cooled to exactly 70.0 ºC pour the water into the can. Read the temperature, $\mathbf{t_2}$, to the nearest 0.5 ºC of the water after exactly **two minutes**. Record this temperature.

temperature of water, $\mathbf{t_2}$ = ... ºC [1]

(ii) Remove the lagging and pour the water into a measuring cylinder. Record the volume.

volume of water = ... cm^3 [1]

(iii) 1 cm^3 of water has a mass of 1 g. Calculate the mass, $\mathbf{m_2}$, of the volume of water you recorded in **(c)(ii)**.

mass of water, $\mathbf{m_2}$ = ... g [1]

(d) Calculate

(i) $\mathbf{t_3}$, the fall in temperature of the hot water, $\mathbf{t_3}$ = (70.0 - $\mathbf{t_2}$).

$\mathbf{t_3}$ = ... ºC

(ii) $\mathbf{t_4}$, the rise in temperature of the can, $\mathbf{t_4}$ = ($\mathbf{t_2}$ - $\mathbf{t_1}$).

$\mathbf{t_4}$ = ... ºC [2]

© UCLES 2010

www.theallpapers.com

For Examiner's Use

(e) **(i)** Use the equation to calculate the specific heat capacity, **shc**, of the material of the can.

$$\mathbf{shc} \times \mathbf{m_1} \times \mathbf{t_4} = \mathbf{m_2} \times \mathbf{t_3} \times \mathbf{4.2}$$

specific heat capacity of the material of the can = ... $J\,g^{-1}\,{}^{o}C^{-1}$ [4]

(ii) Use your answer from **(e)(i)** to calculate the specific heat capacity in $J\,kg^{-1}\,{}^{o}C^{-1}$.

specific heat capacity of the material of the can = ... $J\,kg^{-1}\,{}^{o}C^{-1}$ [1]

(f) The teacher said that the specific heat of a liquid, in joules per kilogram of the liquid per degree, can be found by placing an electrical heater in the liquid and measuring the temperature rise.

What other measurements would be needed to calculate the specific heat capacity of the liquid?

.....

.....

.....

..... [3]

www.theallpapers.com

For Examiner's Use

3 You are going to investigate the rate of reaction between magnesium and hydrochloric acid.

Read through the procedure before starting the experiment.

(a) (i) Set up the apparatus as shown in Fig. 3.1.

- Fill the 100 cm^3 measuring cylinder and trough with water.

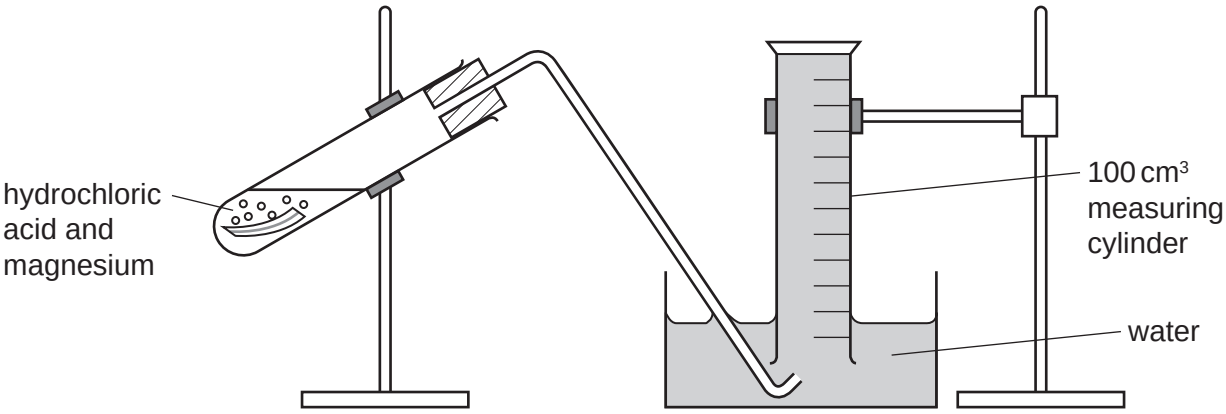

Fig. 3.1

(ii)
- Place 20 cm^3 of the hydrochloric acid in the large test-tube.
- Cut 6 cm of magnesium ribbon from the length provided.
- Loosely fold the piece of magnesium ribbon and place it in the acid contained in the test-tube. Immediately replace the stopper and delivery tube and start the timer.
- Read the volume of gas in the measuring cylinder after 20, 40, 60 and 80 seconds.
- Record the volumes in Table 3.1. [2]

(b) (i) You will now repeat the procedure using the same length of magnesium but different volumes of acid and water.

- Wash out the contents of the test-tube.
- Refill the measuring cylinder with water.
- Place 16 cm^3 of hydrochloric acid in the test-tube and 4 cm^3 of water.
- Cut 6 cm of magnesium ribbon and place it in the acid. Replace the stopper and delivery tube.
- Immediately start the timer.
- Read the volume of gas in the measuring cylinder after 20, 40, 60 and 80 seconds.
- Record the volumes in Table 3.1.

www.theallpapers.com

For Examiner's Use

(ii) Repeat the experiment **two** more times using volumes of acid and water as shown in Table 3.1. Record the results in Table 3.1. [2]

Table 3.1

volume of 2 mol / dm^3 hydrochloric acid / cm^3	volume of water / cm^3	concentration of acid in the mixture / mol / dm^3	volume of gas collected / cm^3 after			
			20 s	40 s	60 s	80 s
20	0	2.0				
16	4	1.6				
12	8					
4	16					

(c) Complete column 3 in Table 3.1. [1]

www.theallpapers.com

(d) Draw a graph of volume of gas collected **after 40 s** (vertical axes) against concentration of hydrochloric acid. Include the origin in your plots and draw a smooth curve.

For Examiner's Use

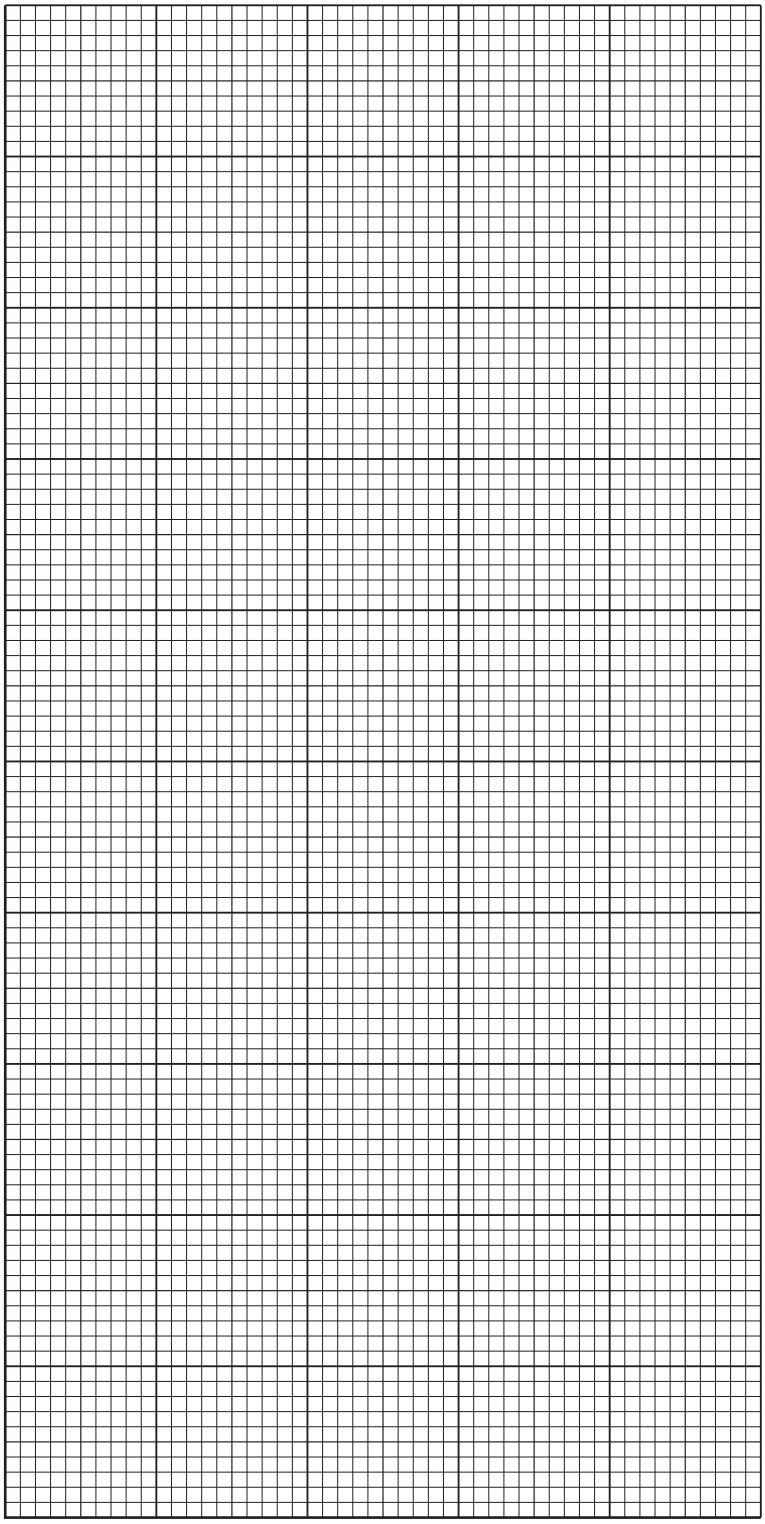

[4]

www.theallpapers.com

For Examiner's Use

(e) How is the rate of reaction affected by concentration of acid? Explain how your results enable you to decide this.

.....

..... [2]

(f) Had any of the reactions finished by the time 80 s had been reached? Explain your answer.

.....

.....

..... [1]

(g) The teacher said that if powdered magnesium is used in the experiment instead of a metal strip, the results will be different.

Describe an experiment to find what would be different. Suggest what the difference might be.

.....

.....

.....

..... [3]

www.theallpapers.com

CHEMISTRY PRACTICAL NOTES

Test for anions

anion	*test*	*test result*
carbonate (CO_3^{2-})	add dilute acid	effervescence, carbon dioxide produced
chloride (Cl^-) [in solution]	acidify with dilute nitric acid, then add aqueous silver nitrate	white ppt.
nitrate (NO_3^-) [in solution]	add aqueous sodium hydroxide then aluminium foil; warm carefully	ammonia produced
sulfate (SO_4^{2-}) [in solution]	acidify then add aqueous barium chloride *or* aqueous barium nitrate	white ppt.

Test for aqueous cations

cation	*effect of aqueous sodium hydroxide*	*effect of aqueous ammonia*
ammonium (NH_4^+)	ammonia produced on warming	-
copper(II) (Cu^{2+})	light blue ppt., insoluble in excess	light blue ppt., soluble in excess giving a dark blue solution
iron(II) (Fe^{2+})	green ppt., insoluble in excess	green ppt., insoluble in excess
iron(III) (Fe^{3+})	red-brown ppt., insoluble in excess	red-brown ppt., insoluble in excess
zinc (Zn^{2+})	white ppt., soluble in excess giving a colourless solution	white ppt., soluble in excess giving a colourless solution

Test for gases

gas	*test and test results*
ammonia (NH_3)	turns damp red litmus paper blue
carbon dioxide (CO_2)	turns limewater milky
chlorine (Cl_2)	bleaches damp litmus paper
hydrogen (H_2)	“pops” with a lighted splint
oxygen (O_2)	relights a glowing splint

Permission to reproduce items where third-party owned material protected by copyright is included has been sought and cleared where possible. Every reasonable effort has been made by the publisher (UCLES) to trace copyright holders, but if any items requiring clearance have unwittingly been included, the publisher will be pleased to make amends at the earliest possible opportunity.

University of Cambridge International Examinations is part of the Cambridge Assessment Group. Cambridge Assessment is the brand name of University of Cambridge Local Examinations Syndicate (UCLES), which is itself a department of the University of Cambridge.

© UCLES 2010

www.theallpapers.com