Surname		Other Names	
Centre Number		Candidate Number	
Candidate Signature			

Leave blank

General Certificate of Education
June 2004
Advanced Subsidiary Examination

ASSESSMENT and QUALIFICATIONS ALLIANCE

ELECTRONICS ELE2
Unit 2 Further Electronics

Wednesday 26 May 2004 Morning Session

In addition to this paper you will require:
- a calculator;
- a pencil and a ruler.

Time allowed: 1 hour 30 minutes

Instructions
- Use blue or black ink or ball-point pen. Use pencil for drawing.
- Fill in the boxes at the top of this page.
- Answer **all** questions in the spaces provided. All working must be shown.
- Do all rough work in this book. Cross through any work you do not want marked.
- A *Data Sheet* is provided on pages 3 and 4. Detach this perforated sheet at the start of the examination.

Information
- The maximum mark for this paper is 72.
- Mark allocations are shown in brackets.
- Any correct electronics solution will gain credit.
- The paper carries 40% of the total marks for Electronics Advanced Subsidiary and 20% of the total marks for Electronics Advanced Level awards.
- You are reminded of the need for good English and clear presentation in your answers.

For Examiner's Use			
Number	Mark	Number	Mark
1			
2			
3			
4			
5			
6			
7			
Total (Column 1) →			
Total (Column 2) →			
TOTAL			
Examiner's Initials			

www.theallpapers.com

Data Sheet

- A perforated *Data Sheet* is provided on pages 3 and 4 of this question paper.
- This sheet may be useful for answering some of the questions in the examination.
- Detach this perforated sheet at the start of the examination.

www.theallpapers.com

LEAVE MARGIN BLANK

Answer **all** questions in the spaces provided.

1 A student constructs the non-inverting amplifier circuit shown below.

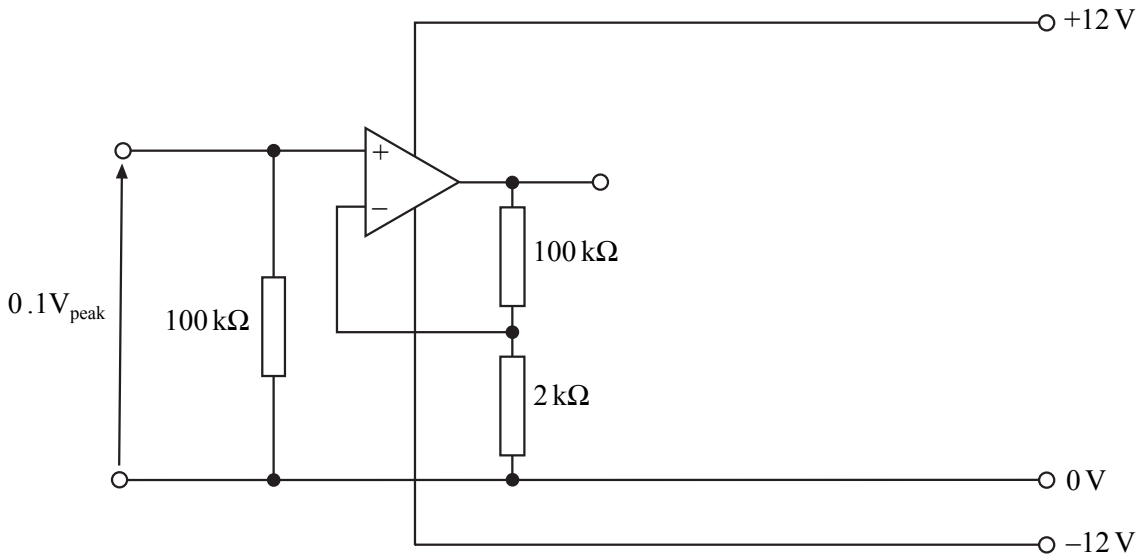

(a) Calculate the peak output voltage from the circuit.

.....

.....

(2 marks)

(b) To drive a loudspeaker a student decides to add one n-channel and one p-channel MOSFET to the circuit. On the diagram above show how these MOSFETs and the loudspeaker should be connected. *(3 marks)*

(c) At low volume settings the output is very distorted.

(i) Name this type of distortion.

.....

(ii) Explain what causes this type of distortion.

.....

.....

.....

(iii) How can this distortion be reduced?

.....

.....

(4 marks)

www.theallpapers.com

LEAVE MARGIN BLANK

2 (a) Each input channel of a sound mixing desk has the circuit shown below.

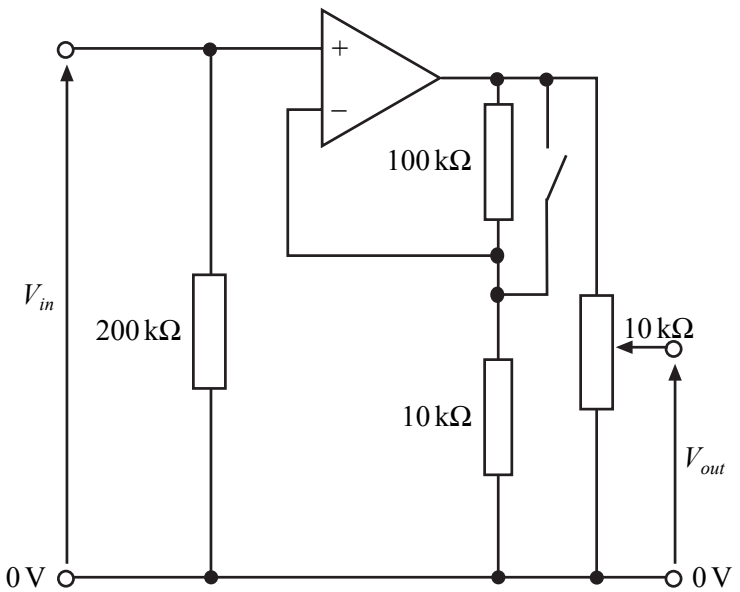

(i) Calculate the maximum voltage gain of the circuit when the switch is open.

.....

.....

(ii) What is the maximum voltage gain of the circuit when the switch is closed?

.....

(iii) What is the input resistance of the complete circuit?

.....

(5 marks)

www.theallpapers.com

LEAVE MARGIN BLANK

(b) Complete the circuit diagram below of the summing amplifier, to show how four input circuits like those in part (a) can be combined to form one output.

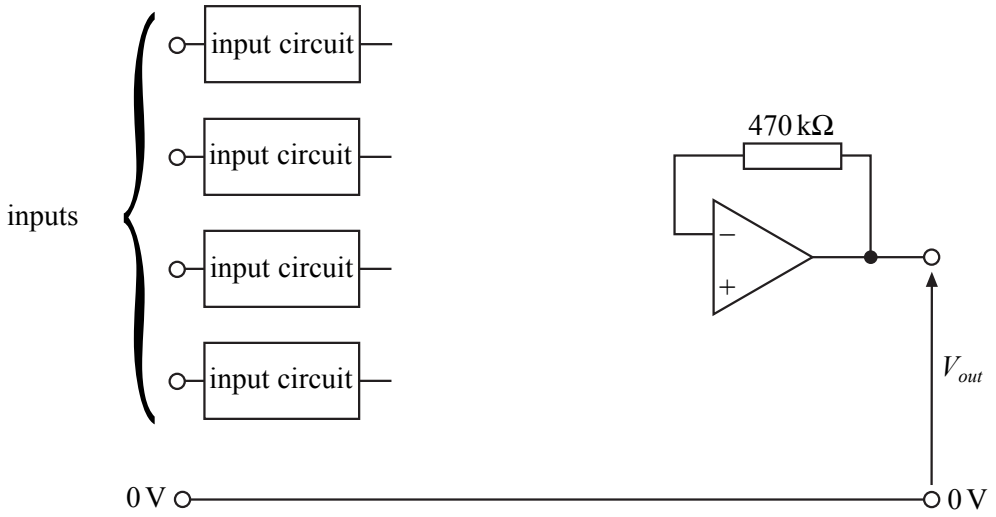

(2 marks)

(c) If the maximum voltage gain from the input to the output of the complete system is to be 110, calculate a suitable value for the input resistors of the summing amplifier.

.....

.....

.....

(2 marks)

9

TURN OVER FOR THE NEXT QUESTION

www.theallpapers.com

LEAVE MARGIN BLANK

3 The output from a music keyboard is insufficient to operate a high power audio amplifier and so the circuit below is used to amplify the output from the keyboard.

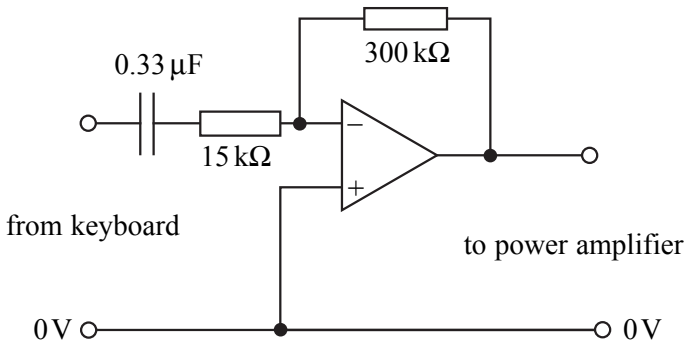

(a) (i) Calculate the voltage gain of the circuit.
Ignore the effect of the 0.33 μF capacitor.

.....

.....

.....

(ii) State **two** differences between the output and input signals.

.....

.....

(4 marks)

(b) Show that the reactance of the capacitor is approximately 15 kΩ at a frequency of 32 Hz.

.....

.....

(2 marks)

www.theallpapers.com

LEAVE MARGIN BLANK

(c) The gain-bandwidth product of the op-amp is 5×10^5 Hz. Sketch onto the axes below the frequency response of the amplifier.

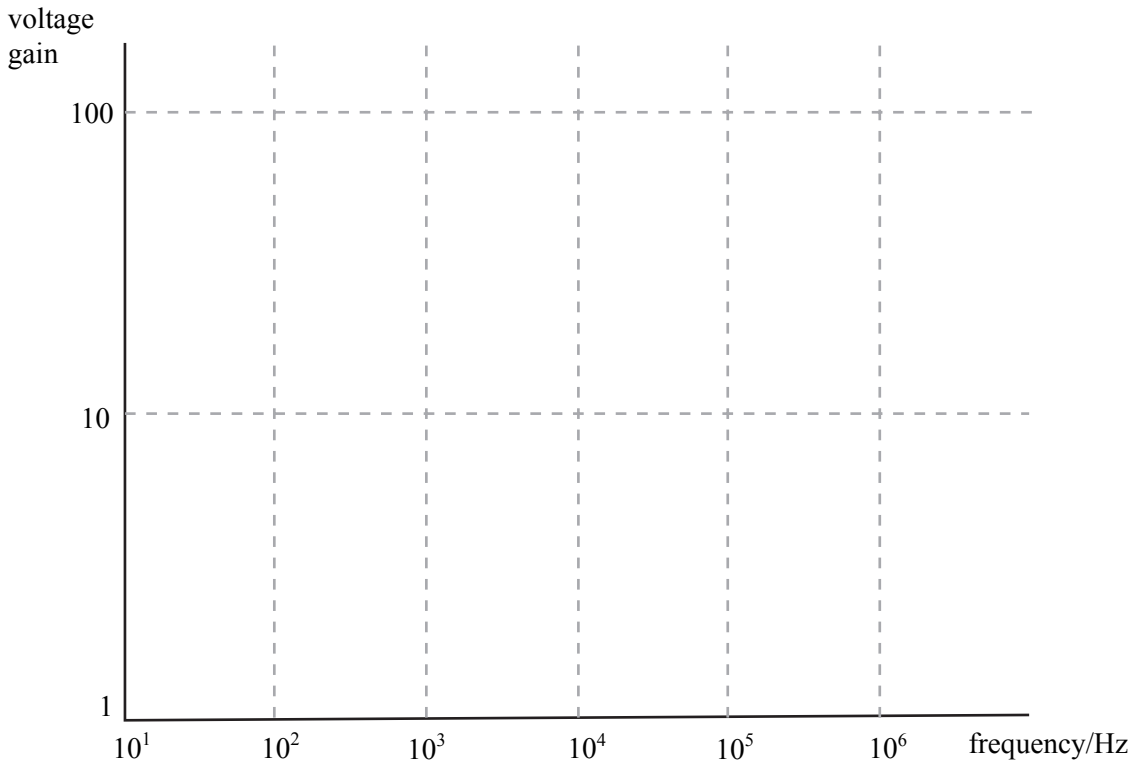

(3 marks)

9

TURN OVER FOR THE NEXT QUESTION

www.theallpapers.com

LEAVE MARGIN BLANK

4 The circuit below is used to provide a constant output of 5 V from an unregulated power supply.

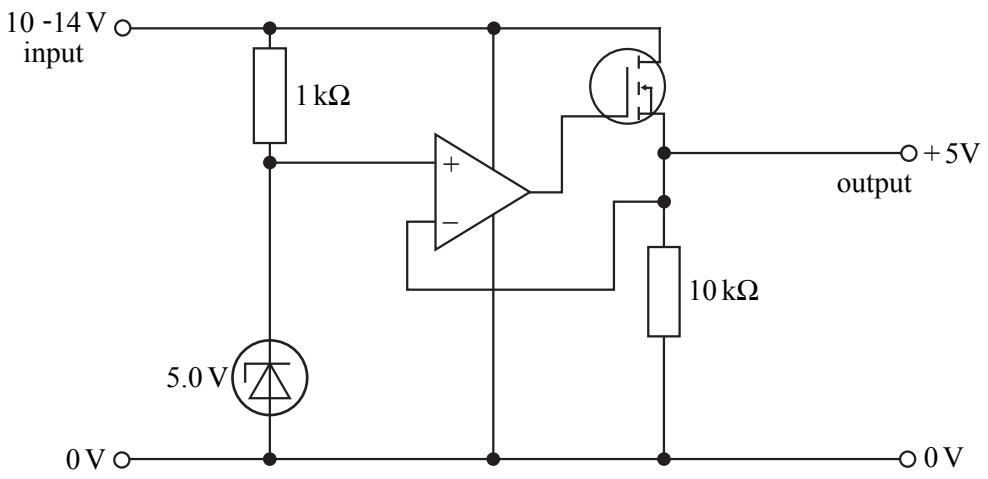

(a) (i) Explain the function of the op-amp.

.....

.....

.....

(ii) State the function of the MOSFET.

.....

(3 marks)

(b) (i) When the circuit is supplying 5 V at 3 A, state the current that passes through the MOSFET.

.....

(ii) Calculate the maximum voltage across the MOSFET.

.....

(iii) Calculate the maximum power dissipated in the MOSFET.

.....

.....

(3 marks)

(c) The MOSFET is mounted on a heat sink.
State **three** design features of an efficient heat sink.

.....

.....

.....

(3 marks)

www.theallpapers.com

LEAVE MARGIN BLANK

5 The system diagram of a motor speed controller is shown below.

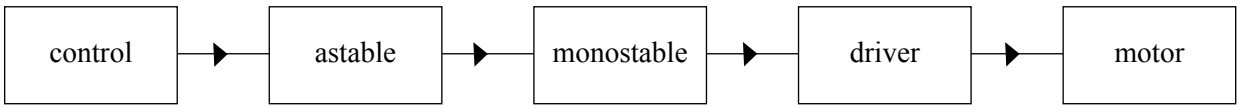

The circuit diagram for the first three sub-systems is shown below.

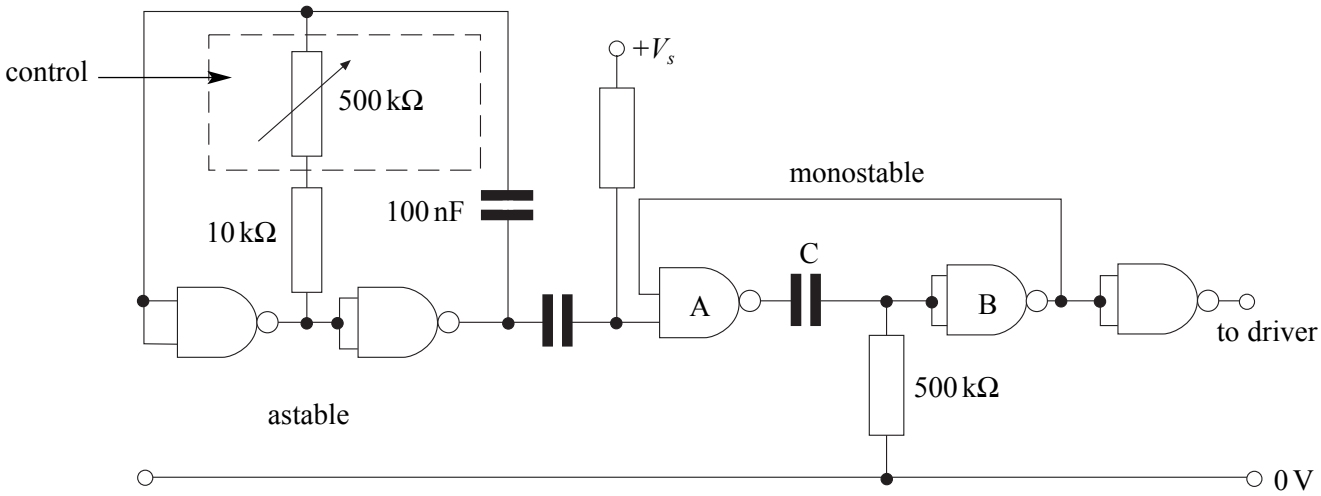

(a) (i) Explain how the monostable circuit operates.

.....

.....

.....

.....

.....

.....

.....

.....

(ii) The monostable has a time period of 10 ms.
Calculate a suitable value for C.

.....

.....

(7 marks)

(b) Show that the minimum period of the astable is 2 ms.

.....

.....

(2 marks)

www.theallpapers.com

LEAVE MARGIN BLANK

6 The circuit diagram below is part of a pulse generator.

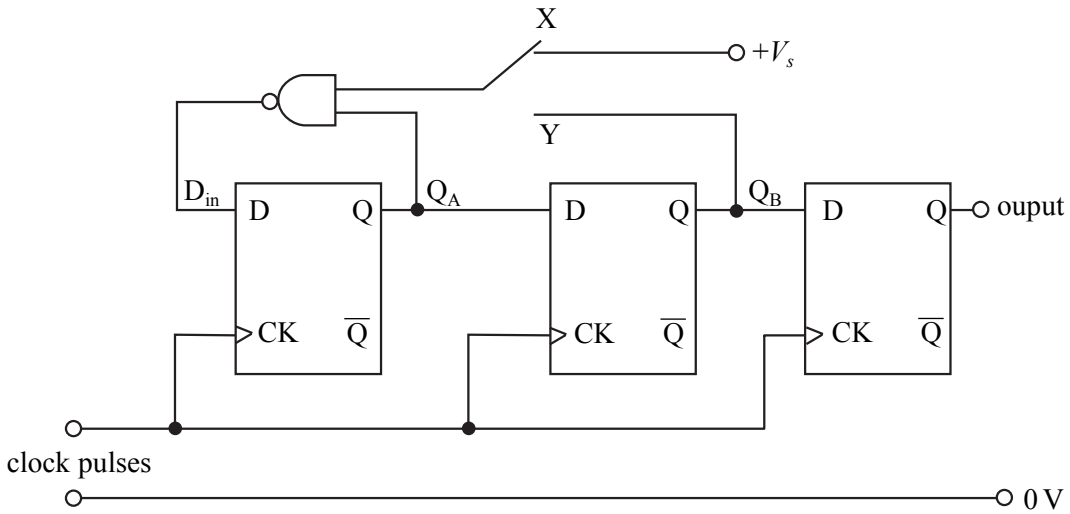

(a) What is the usual name for the arrangement of D-type flip-flops in the circuit above?

.....

(1 mark)

(b) When the switch is in position X, what is the logic function of the NAND gate?

.....

(1 mark)

(c) When the switch is in position X, the output pulses are at half the frequency of the clock pulses. Draw a circuit diagram below to show how this could be achieved using a single D-type flip-flop.

(3 marks)

www.theallpapers.com

LEAVE MARGIN BLANK

(d) When the switch is in position Y, complete the timing diagram below.

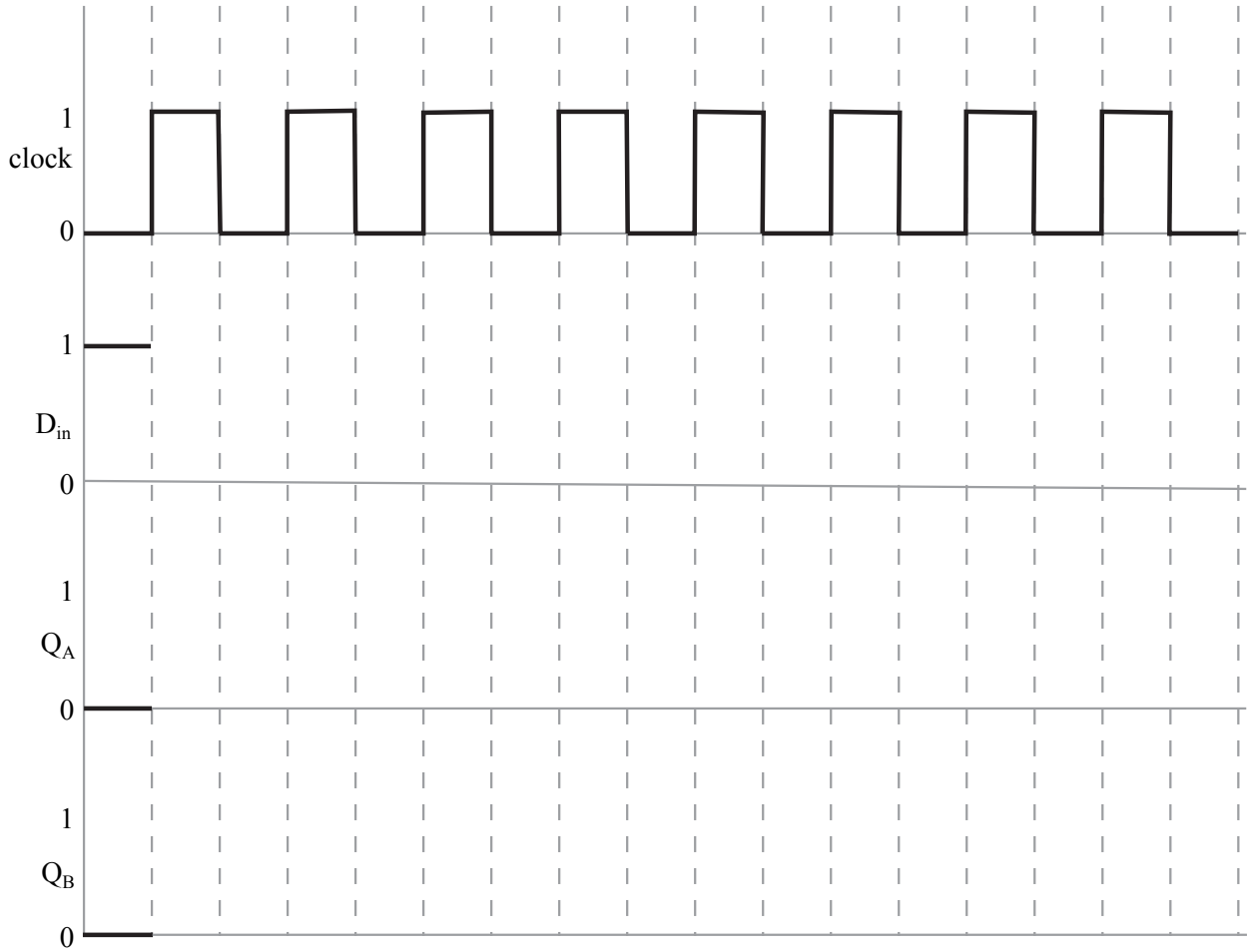

(4 marks)

9

TURN OVER FOR THE NEXT QUESTION

www.theallpapers.com

LEAVE MARGIN BLANK

7 (a) An industrial process takes 12 hours. Complete the diagram below to show how the four D-type flip-flops can be connected to form a binary up counter which resets at 12.

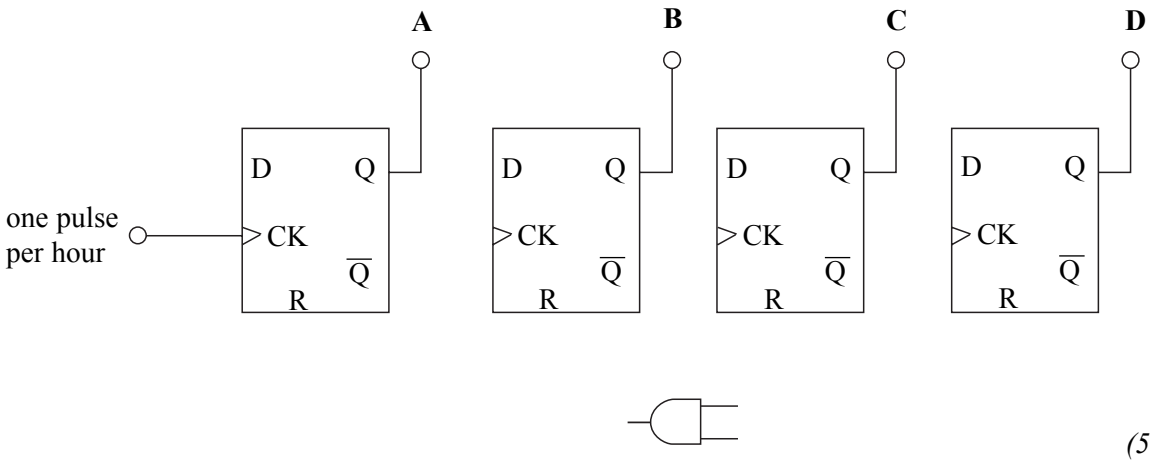

(5 marks)

(b) The counter circuit above is required to turn on a heater during the first, third, tenth and last hour of the process.
Complete the truth table below to show the output states of the flip-flops.

Hour	D	C	B	A
first	0	0	0	0
third	0	0	1	0
tenth				
last	1			1

(4 marks)

(c) Using the truth table above, state the Boolean expression for when the heater is switched on.

.....

.....

(2 marks)

www.theallpapers.com

LEAVE MARGIN BLANK

(d) Simplify the expression in part (c) using either Boolean algebra or a Karnaugh map.

.....

.....

.....

.....

.....

.....

DC \ BA	00	01	11	10
00				
01				
11				
10				

(4 marks)

(e) Draw a circuit diagram, using logic gates, to show how to connect the hour counter in part (a) to produce an output which gives a logic 1 when the heater should be on.

(3 marks)

$\overline{}$ 18

END OF QUESTIONS

Copyright © 2004 AQA and its licensors. All rights reserved.

www.theallpapers.com

THERE ARE NO QUESTIONS PRINTED ON THIS PAGE

www.theallpapers.com