Version 1.0

ASSESSMENT and QUALIFICATIONS ALLIANCE

General Certificate of Education

Electronics 5431/6431

ELE1 Foundation Electronics

Mark Scheme

2006 examination – June series

Mark schemes are prepared by the Principal Examiner and considered, together with the relevant questions, by a panel of subject teachers. This mark scheme includes any amendments made at the standardisation meeting attended by all examiners and is the scheme which was used by them in this examination. The standardisation meeting ensures that the mark scheme covers the candidates' responses to questions and that every examiner understands and applies it in the same correct way. As preparation for the standardisation meeting each examiner analyses a number of candidates' scripts: alternative answers not already covered by the mark scheme are discussed at the meeting and legislated for. If, after this meeting, examiners encounter unusual answers which have not been discussed at the meeting they are required to refer these to the Principal Examiner.

It must be stressed that a mark scheme is a working document, in many cases further developed and expanded on the basis of candidates' reactions to a particular paper. Assumptions about future mark schemes on the basis of one year's document should be avoided; whilst the guiding principles of assessment remain constant, details will change, depending on the content of a particular examination paper.

www.theallpapers.com

Unit ELE1 – Foundation Electronics

1 (a)

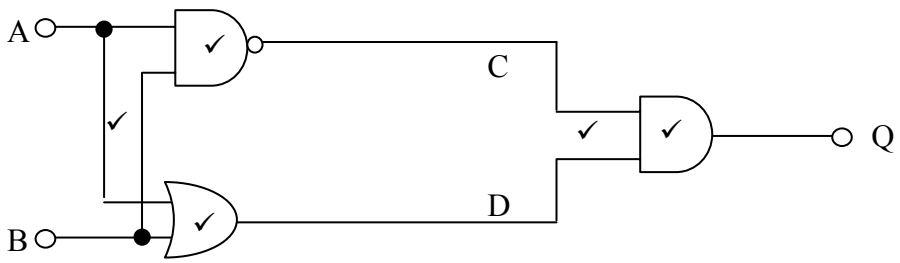

(5 marks)

(b) C = $\overline{\mathbf{A.B}}$ ✓ ✓

D = **A + B** ✓

(3 marks)

(c) Q = **($\overline{\mathbf{A.B}}$) . A + B (or A⊕B)**✓ ✓

(2 marks)
(question total 10 marks)

2 (a)

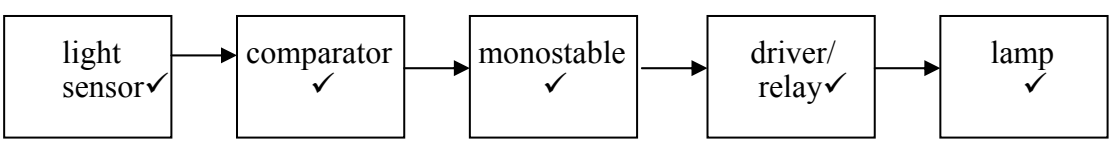

(5 marks)

(b) (i) comparator✓

(ii) light sensor✓

(iii) driver✓

(3 marks)

(c) (i) 515 – 15 = 500 mA✓

(ii) P = V x I = 12 x 0.5✓ = 6W✓

(3 marks)
(question total 11 marks)

www.theallpapers.com

3 (a) (i) I = V/R = $12/10^4$✓ = 1.2 mA✓

(ii) 2200 + 1000 = 3200μF✓

(iii) T = RC = 10^4 x 3.2 x 10^{-3}✓ = 32s✓

(5 marks)

(b) (i) 6/12 = ½ Vs✓ T = 0.69RC✓ 0.69 x 32 = 22s✓

(ii) 5RC = 5 x 32✓ = 160s✓

(5 marks)
(question total 10 marks)

4 (a) (i) and (ii)

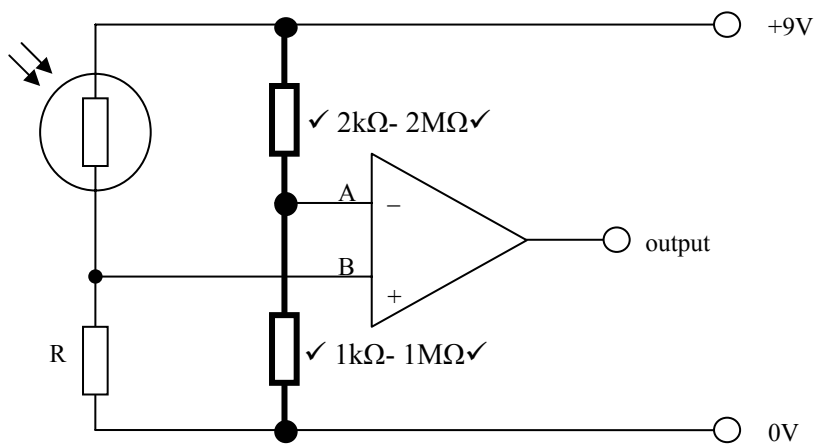

(4 marks)

(b) (i) I = P/V = 90/9✓ = 10 mA✓

(ii) R = V/I = 9/0.01 = 900Ω✓ (allow ecf)

(iii) 900 – 100 = 800Ω✓(allow ecf)

(iv) 820Ω✓(allow ecf)

(5 marks)

(c) (i) 0V✓

(ii) 0.1 – 3V✓

(2 marks)

(d) (i) 9V✓

(ii) 6 – 8.9V✓

(2 marks)
(question total 13 marks)

www.theallpapers.com

5 (a) (i) and (ii)

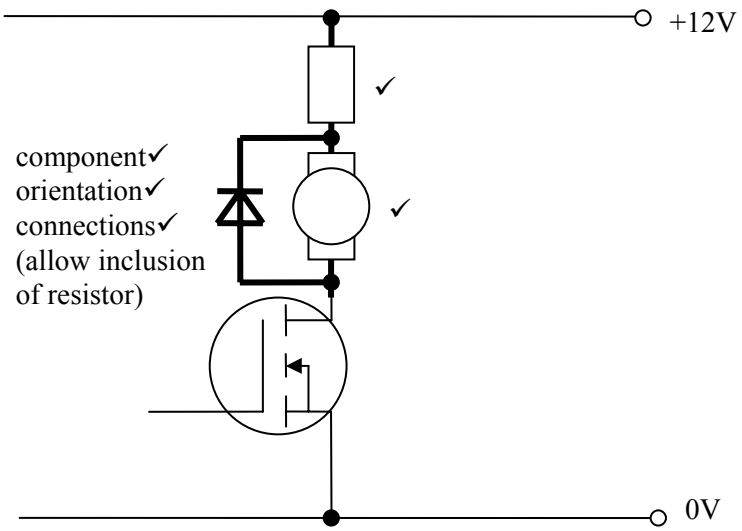

(5 marks)

(b) (i) 12 – 4 = 8V✓

(ii) 8/0.15✓ = 53Ω✓

(iii) 8 x 0.15✓ = 1.2W✓

(iv) 51Ω✓

(v) motor runs faster, or has more voltage across it, or more current✓

(vi) 4W✓

(vii) wirewound✓

(viii) ✓ ✓ ✓

(ix) air circulation, or mount off board, or air gap, or heat dissipation✓

(13 marks)

(question total 18 marks)

www.theallpapers.com

6 (a)

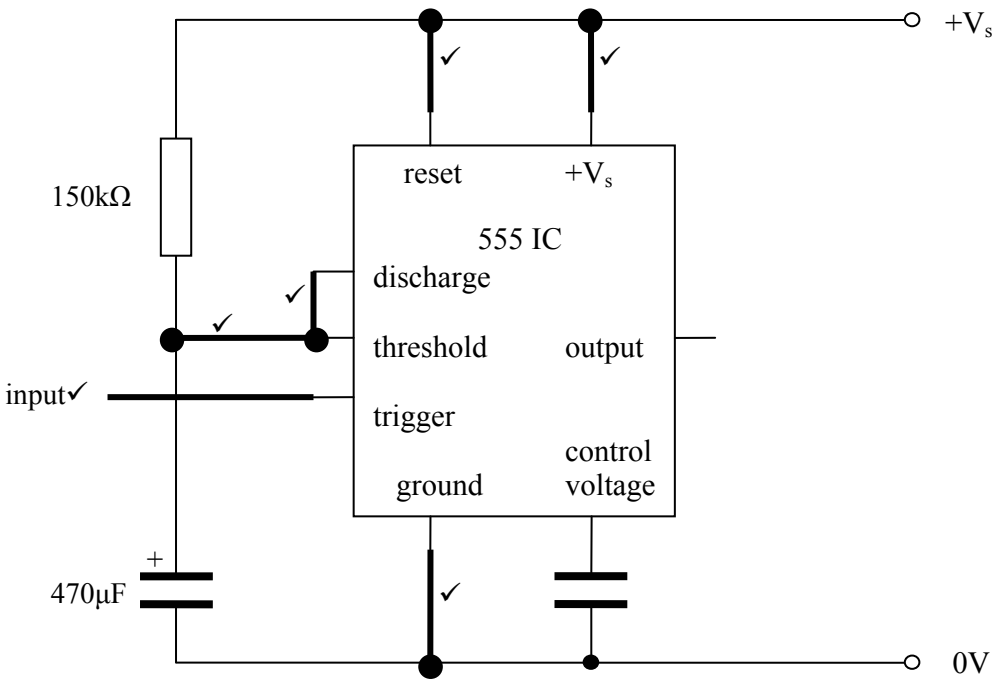

(6 marks)

(b) 1.1 RC = 1.1 x 1.5 x 10^5 x 4.7 x 10^{-4} ✓= 77.5s✓

(2 marks)

(c) COM✓ and NO✓ (any order)

(2 marks)
(question total 10 marks)

www.theallpapers.com